KOCOM®

DOOR PHONE

KDP-601A/601D MANUAL FOR OPERATION AND INSTALLATION

Features

- Gentle electronic chime sound.
- KDP-601A: AC 220V (only) or 110V(only)
- KDP-601D: Used DC 6V (4Piece of 1.5V batteries into housing, lasts 10months)
- Communication range: 0.65mm wire, 300m line
- Can be combined with door opener.
- Easily mounted on wall,desk

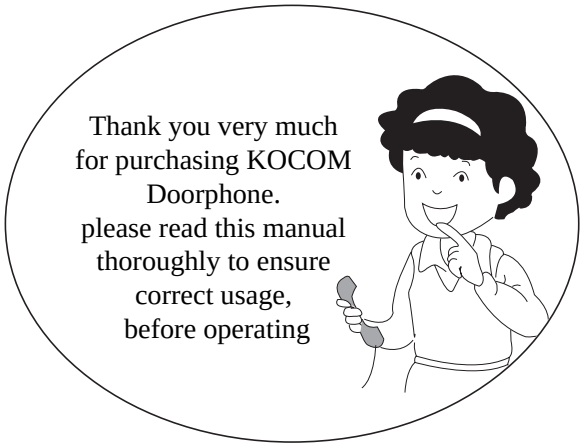

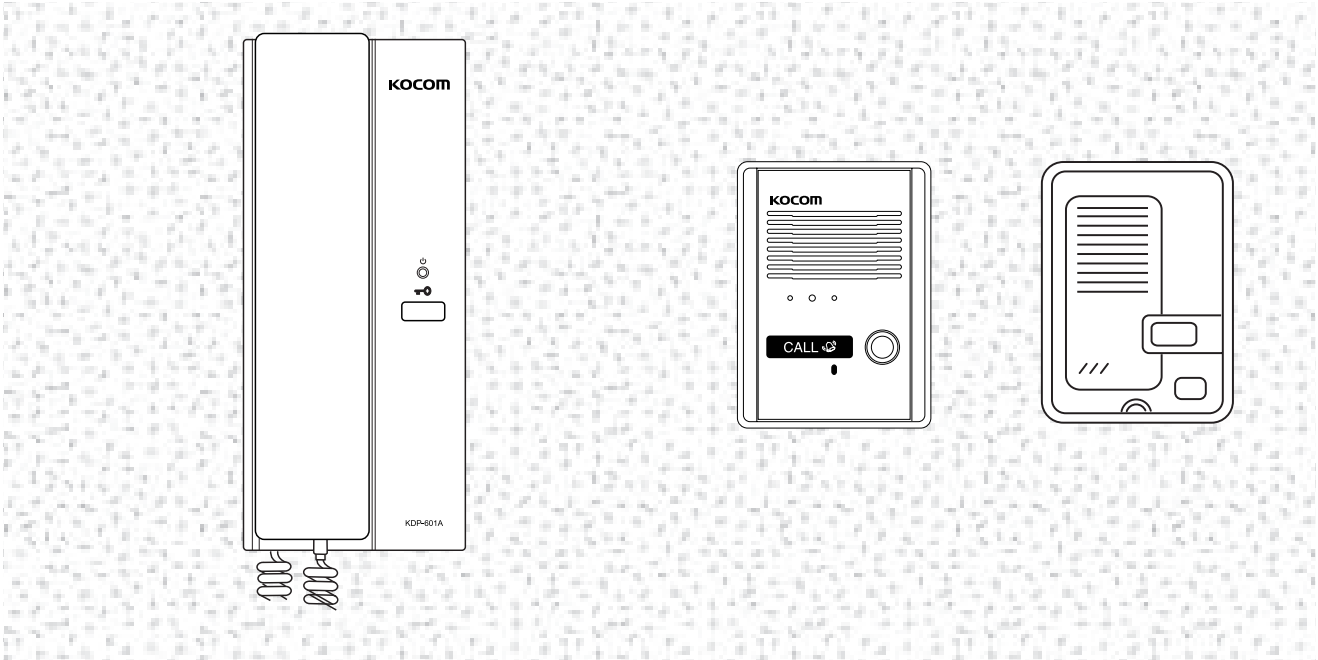

KOCOM CO.,LTD.

Precautions for Operation

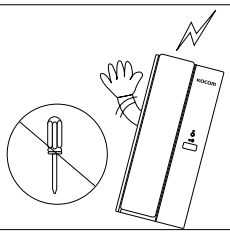

As this device consists of precise electronic components, and high voltage is generated internally, do not attempt to disassemble.

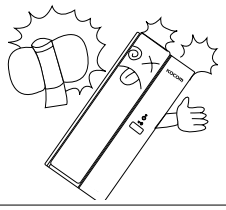

Do not drop lndoor station, and avoid strong impact.

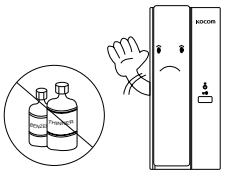

When cleaning, never use wet hands, volatile benzene or paint thinner.

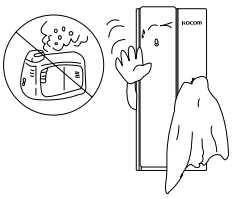

Keep away from humidifier and stove. High temperature and humidity can cause malfunction

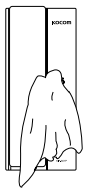

Maintain the product clear by frequently cleaning with soft cloths

Name of Each Part

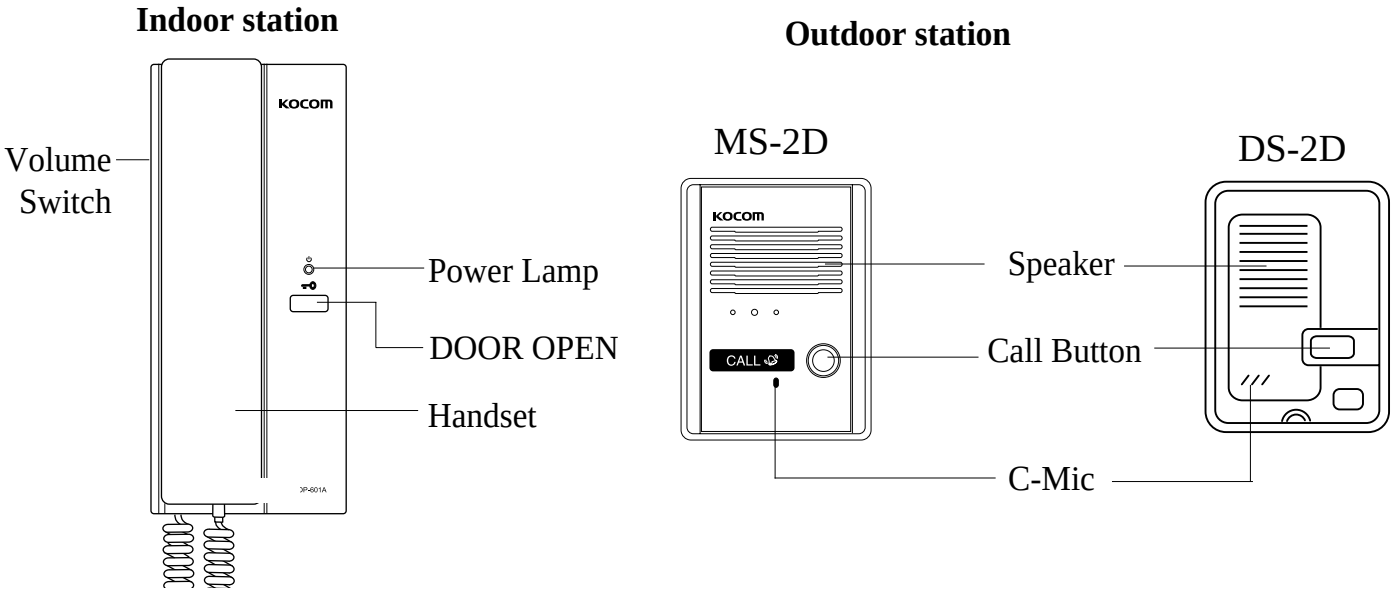

How to operate (Instruction for operating)

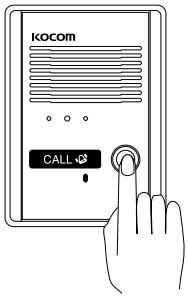

When a visitor pushes the outdoor station bell,

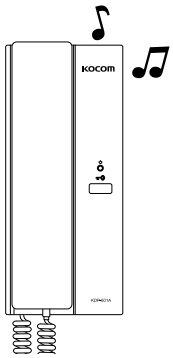

The indoor station is ringing.

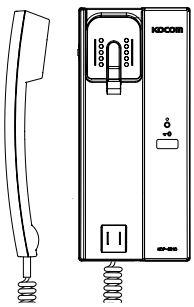

Pick up the handset and communicate with a visitor. After end of communication, return the handset where it is locked

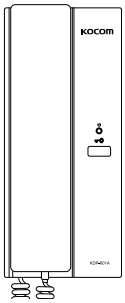

To release the door, press the “Door Key” button

Wring Diagram

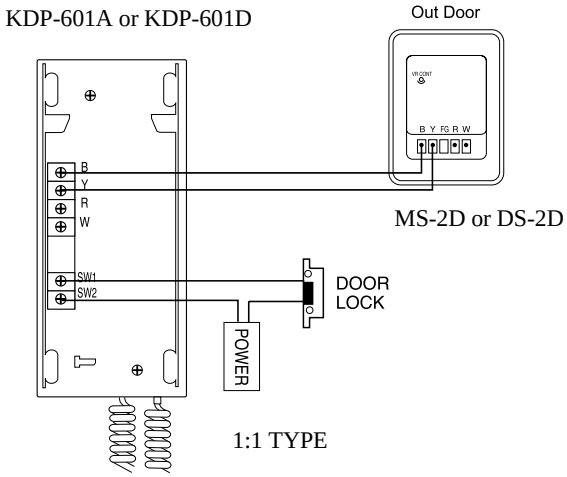

Installation

Installation of Indoor station

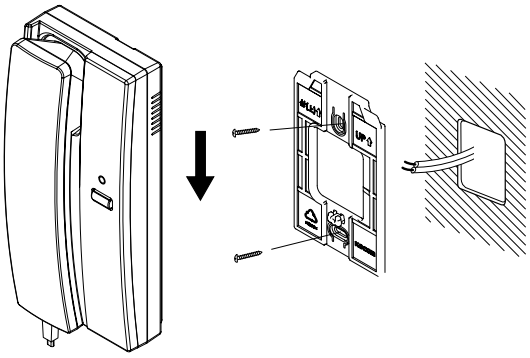

A- Choose a place on the wall where you want to hang the Indoor station.
B- Fasten the wall hanger on the wall.
C- Indoor station can be hung on the wall hanger easily now.

Installation of outdoor station

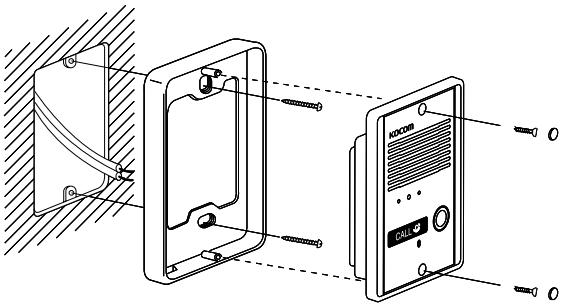

After attaching the body supporter with 2screws, put the indoorstation into the grooves of body supporter,and then fix it with screws.

Specifications

Description	KDP-601A (AC)	KDP-601D (DC)
Electric source	AC 220V(only) or 110V(only)	DC 6V(LR6-AA 1.5V X 4)
Consumption	Unload: 0.5W In load: 3.3W	Un load: 0.5mW In load: 0.6W
Signal Sound	Chime	Chime
Wiring	2Wired polarity	2Wired polarity
Range	300m(ø 0.65mm)	300m(ø 0.65mm)

Component

- Master station for indoor-use
- Out door pannel
- Wall hanger for master station
- Doorlock(Option)

Warranty



To receive after sales service, have the following ready when you contact our branches

1. Name of the product
2. Model number of the product
3. The area of problem
4. Phone number and address at which you can be contacted.

Warranty Card

PRODUCT	
MODEL	
DATE PURCHASED	
WARRANTY PERIOD	
AGENCY	
AGENCY ADDRESS	

KOCOM Warranties the original purchaser of this product as follows.

1) This product is produced under strict quality control and inspection procedures.
2) If this product breaks down during proper use as a result of product defect, KOCOM will repair it within one year from date of purchase free of charge.
3) The following cases will be subject to charge, even during warranty period:
   a. Breakdown during transport, or through careless treatment, by consumer.
   b. Breakdown caused by unauthorized repair, or system modification.
   c. Breakdown caused by natural disaster or power disorder.