PRIMESTAR®

SIRIM QAS INTERNATIONAL · ISO 9001 CERTIFIED · UKAS MANAGEMENT SYSTEMS

Primestar 19" Rack with Cable Management System



Trunking for Cable Management



Wire duct to facilitate a better cable management.

19" Power Outlet



13 Amp Power Outlet allows to mount on the 19" panel mounting.

Adjustable Feet / Castor Wheel



Adjustable feet is for levelling the rack after it has been placed in position. Caster wheels is available in set of 4.

Panel Mounting Member



Allows all standard 19" equipment to be mounted on it.

Standard unit of 19" PRIMESTAR Trunking rack comprises of the following items:

- Rack framework
- 1 Vented top cover
- 2 front glass door with lock
- 2 vented rear door with lock
- 2 detachable side panel with lock
- 4 adjustable panel mounting members
- 1 row power points
- Cable with plug top
- Cable wheel
- 40 sets of M6 caged nuts
- 1 set adjustable feet
- 4X Metal trunking for cable Management (Vertical)
- Epoxy high quality powder coated finishing (Black Colour)

Dimension For 19" Floor Standing

Top View

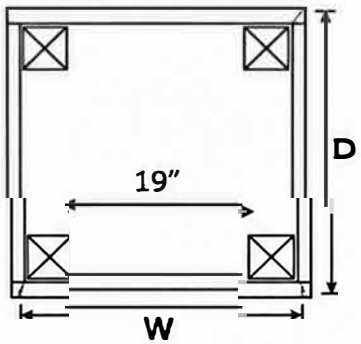

Front View

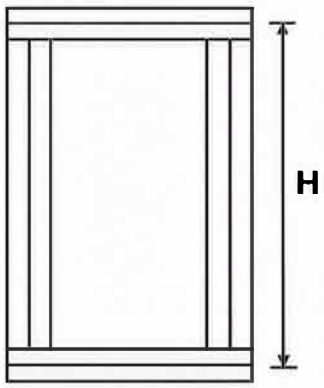

Size	MODEL			Over All Height (mm)	Internal Height (mm)	Power Outlet (13AMP)
	800mm D	900mm D	1000mm D			
15U x 800mm (19")	TFS 1588	TFS 1589	TFS 15810	837	667	5 Socket
18U x 800mm (19")	TFS 1888	TFS 1889	TFS 18810	970	800	5 Socket
24U x 800mm (19")	TFS 2488	TFS 2489	TFS 24810	1237	1067	5 Socket
28U x 800mm (19")	TFS 2888	TFS 2889	TFS 28810	1415	1243	5 Socket
33U x 800mm (19")	TFS 3388	TFS 3389	TFS 33810	1637	1467	10 Socket
37U x 800mm (19")	TFS 3788	TFS 3789	TFS 37810	1815	1645	10 Socket
42U x 800mm (19")	TFS 4288	TFS 4289	TFS 42810	2037	1867	10 Socket