

Doorphone & Interphone





With easier installation and convenience in use, KOCOM Doorphone & Interphone secure the highest communication quality.

Based on automated state-of-the-art production facility, KOCOM develops and produces reliable interphone and doorphone products with the highest communication quality and supplies them to domestic as well as overseas markets.
KOCOM provides a variety of product sets suitable to installation sites (for example, home, store or office) according to its functions and purposes. Consumers can easily install and conveniently use them.

Multiple Doorphone



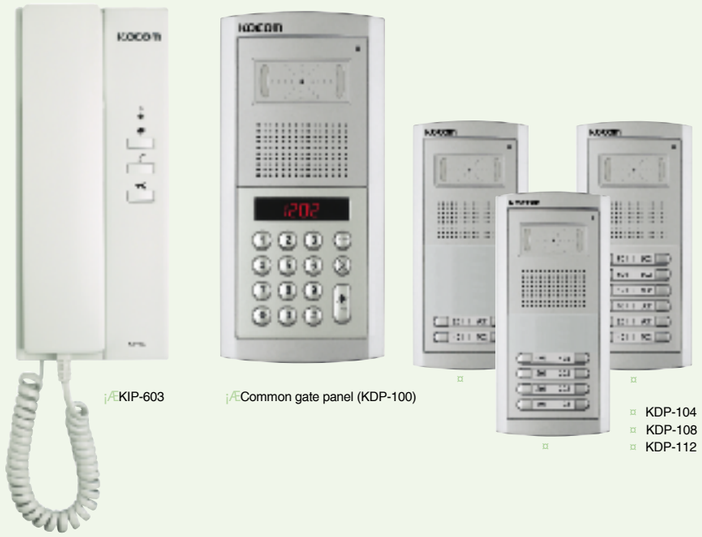

¡ÆKIP-603 ¡ÆCommon gate panel (KDP-100)

¤ KDP-104
¤ KDP-108
¤ KDP-112

[Multiple doorphone Configuration]

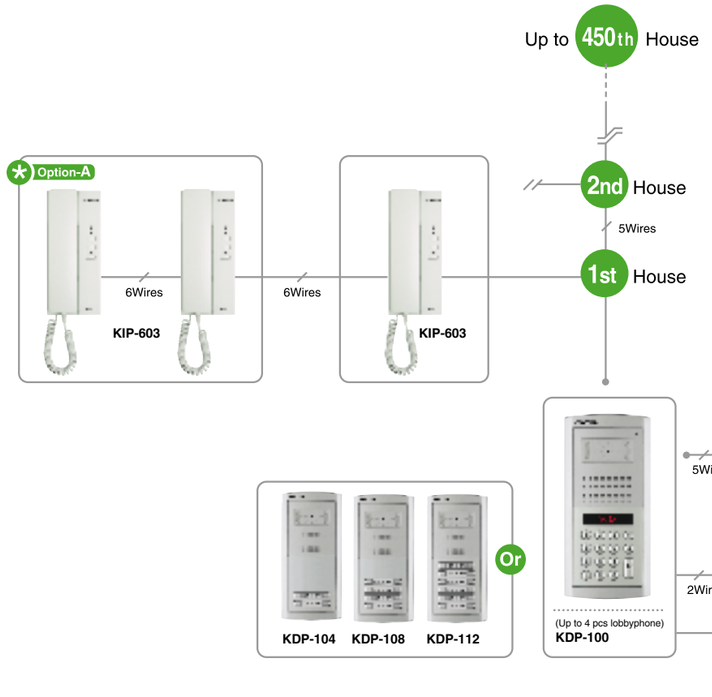

[KIP-603]

- For multi apartment, condominium & villa system, upto 450 houses are available
- Up to 3 indoor extension in a house
- Internal call & conversation function between extended indoor units in a house
- Audio conversation with visitor
- Door open (common gate) function
- Call & conversation function with guard master (KIP-120)

[KIP-120]

- Call & conver sation function with resident & extended KIP-120 (Up to 3pcs in a system)
- Conversation with visitor (KDP-100, KLP-100 series) & door open

[KDP-100 / KDP-104, KDP-108, KDP-112]

- Upto 4 houses (KDP-104), upto 8 houses (KDP-108), upto 12 houses (KDP-112)
- Upto 450 houses connection (KDP-100)
- Communication with guard master (KDP-100)
- Door open function by access code (KDP-100)
- Firm metal body case with new modern design
- Upto 4pcs of common gate panels connection in a building

Dimension

[KIP-603]

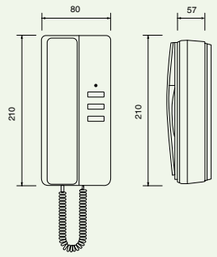

[KIP-120]

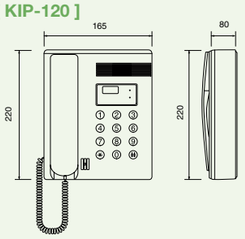

[KDP-100]

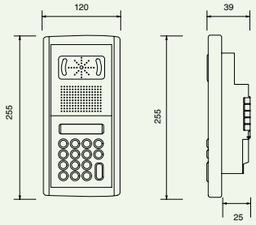

Specifications

Model no.	KIP-603	KIP-120	KDP-100 / 104 / 108 / 112
Power	DC 17V (±1V) powered from common power supply		
Power consumption	Max. 5W, Stand by 2W		
Assurance temperature	0°C~+50°C		-20°C~+50°C
Wiring	5wires (common wiring)		
Max. wiring distance	¤¶0.8 single cable : 300m, 5C-2V coaxial cable : 500m		
Mount type	Surface mount		Flush mount
Dimension (mm)	92(W) x 210(H) x 57(D)	165(W) x 220(H) x 80(D)	120(W) x 255(H) x 39(D)
Weight (Approx.)	0.5kg	1.0kg	1.0kg

The product may include option or additional functions.

¡ ¡ ¡ KDP Series Accessories



Sunvisor
KLP-SV50



Name index
KLP-N150

Multiple Doorphone





¡ÆKDP-205



¡ÆKLP-1000



¡ÆDP-203HA



¡ÆKDP-601A



Diagram

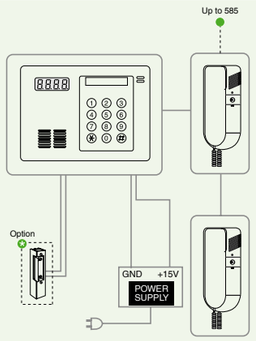

Dimension

[KDP-100]

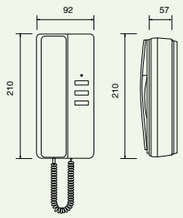

[KDP-100]

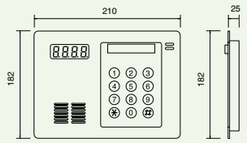

[KDP-205]

- For multi apartment, condominium & villa system, upto 585 houses are available
- Audio conversation with visitor
- Door open (common gate) function
- Call & conversation function with guard (KLP-1000)

[KLP-1000]



- Door open function by access code
- Firm metal body case with new modern design
- Upto 2pcs of common gate panel connection in a building

[Power Supply]

- PS-M2 (15V)
  -Input : AC 100V~130V
  or 220V~240V
  -Output : DC 16.5V / 1A¡ 2V

Specifications

Model no.	KDP-205	KLP-1000
Power	DC 15V (1V) powered from common power supply	
Power consumption	Max. 0.2W, Stand by 0W	Max. 3W, Stand by 0.3W
Assurance temperature	0°C~+50°C	-20°C~+50°C
Wiring	3wires (common wiring)	
Max. wiring distance	∅0.8 single cable : 300m, 5C-2V coaxial cable : 500m	
Mount type	Surface	Surface & Flush mount
Dimension (mm)	92(W) x 210(H) x 57(D)	210(W) x 182(H) x 25(D)
Weight (Approx.)	0.5kg	1.0kg

The product may include option or additional functions.

[DP-203HA / KDP-601A]

- Upto 4 houses connection
- Audio conversation with visitor
- Door open (common gate) function
- Gentle electronic sound
- Easy installation (mount on the wall or desk)

[MSD-1B, MSD-2B, MSD-3B, MSD-4B, KC-MD12/14]

- Aluminum common gate panel
- 1 house (MSD-1B)
- Upto 2 house (MSD-2B)
- Upto 3 house (MSD-3B)
- Upto 4 house (MSD-4B)
- Rain proof, metal anti vandal
- Flush & surface mounting
- Upto 2 house (KC-MD12)
- Upto 4 house (KC-MD14)



MSD-1B MSD-2B MSD-3B MSD-4B KC-MD12 KC-MD14

Specifications

Model no.	DP-203HA, KDP-601A
Power	AC110V or AC220V (± 10%)
Power consumption	Max. 30mA
Assurance temperature	0°C~+50°C
Wiring	2wires
Max. wiring distance	∅0.65 single cable : 300m, 5C-2V coaxial cable : 500m
Mount type	Surface mount
Dimension (mm)	92(W) x 210(H) x 57(D)
Weight (Approx.)	0.5kg

The product may include option or additional functions.

Diagram

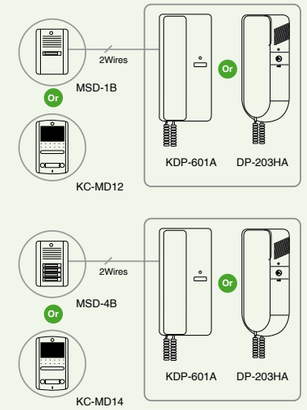

Dimension

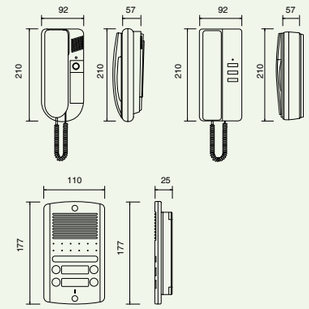

Multiple Interphone





¡ÆKIP-612MBL ¡ÆIP-200PC

[KIP-612MBL / IP-200PC]

- 12Ch Multiple interphone
- Master & sub phone system
- Master : KIP-612MBL
- Sub : IP-200PC
- Gentle electronic sound
- Easy wiring & installation (mount on the wall or desk)

Diagram

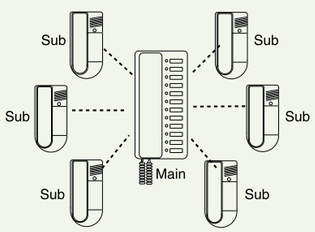

Dimension

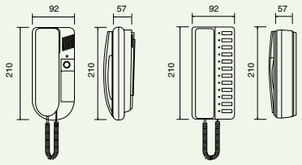

Specifications

Model no.	KIP-612MBL	IP-200PC
Power	DC24V / 1.2A (powered from common power supply)	
Power consumption	Max. 70mA	
Assurance temperature	0°C~+50°C	
Wiring	2wires	
Max. wiring distance	∅0.65 single cable : 1Km	
Mount type	Surface mount	
Dimension (mm)	92(W) x 210(H) x 57(D)	
Weight (Approx.)	0.5kg (1pc)	

The product may include option or additional functions.



[Power Supply]

- PS-M1
  -Input : AC 100V~127V or 220V~240V
  -Output : DC 24V / 1.2A

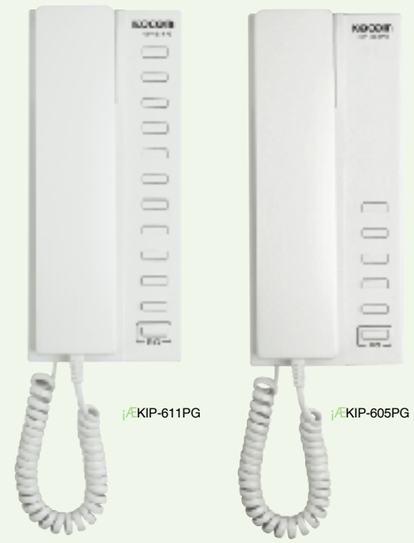

¡ÆKIP-611PG ¡ÆKIP-605PG

[KIP-611PG / KIP-605PG]

- 5 Ch multiple interphone : KIP-605PG
- 11 Ch multiple interphone : KIP-611PG
- Single or multiple connection
- All master intercom system
- Paging function
- Gentle electronic sound
- Easy wiring & installation (mount on the wall or desk)
- Outdoor panel, DS-4M connection

Specifications

Model no.	KIP-605PG	KIP-611PG	DS-4M
Power	DC24V / 1.2A (powered from common power supply)		
Power consumption	Max. 1.7W, Stand by : 0.85W		
Assurance temperature	0°C~+50°C		
Wiring	4wires		
Max. wiring distance	∅0.65 single cable : 1Km		
Mount type	Surface mount		
Dimension (mm)	92(W) x 210(H) x 57(D)		95(W) x 127(H) x 32(D)
Weight (Approx.)	0.5kg (1pc)		

The product may include option or additional functions.



Diagram

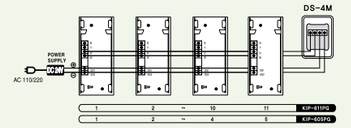

Dimension

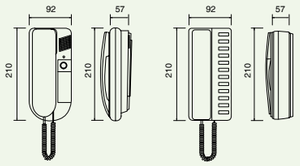



[Power Supply]

- PS-M1
  -Input : AC 100V~127V or 220V~240V
  -Output : DC 24V / 1.2A



[Outdoor Pannel]

- DS-4M

Doorphone & Interphone





[KIP-222]

- Duplex interphone & doorphone
- Audio conversation with visitor
- Door open function
- Internal call & conversation with extended units
- Gentle electronic sound (seperate call sound)
- Easy installation (mount on the wall or desk)

Diagram

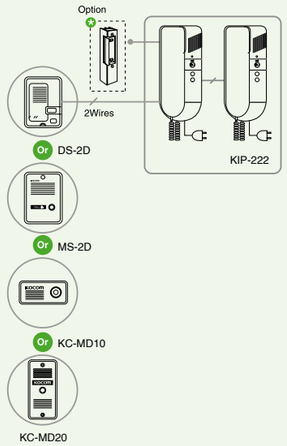

Dimension

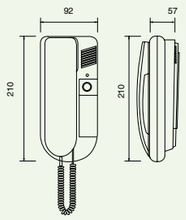

Specifications

Model no.	KIP-222
Power	AC110V or AC220V (±10%)
Power consumption	Max. 30mA
Assurance temperature	0°C~+50°C
Wiring & call sound	Door : 2wires, Chime
	Audio handset : 4wires, Melody
Max. wiring distance	∅0.65 single cable : 300m, 5C-2V coaxial cable : 500m
Mount type	Surface mount
Dimension (mm)	92(W) x 210(H) x 57(D)
Weight (Approx.)	0.5kg (1pc)

The product may include option or additional functions.



[KDP-602A/D]

- Triplex interphone & doorphone
- Upto 3 audio handset with 1 outdoor panel connection
- Audio conversation with visitor
- Door open function
- Internal call & conversation with extended units
- Gentle electronic sound (seperate call sound)
- Easy installation (mount on the wall or desk)

Specifications

Model no.	KDP-602A/D
Power	AC110V or AC220V (±10%)
Power consumption	Max. 150mA
Assurance temperature	0°C~+50°C
Wiring & call sound	Door : 2wires, Chime
	Audio handset : 5wires, Melody
Max. wiring distance	∅0.65 single cable : 300m, 5C-2V coaxial cable : 500m
Mount type	Surface mount
Dimension (mm)	92(W) x 210(H) x 57(D)
Weight (Approx.)	0.5kg (1pc)

The product may include option or additional functions.



Diagram

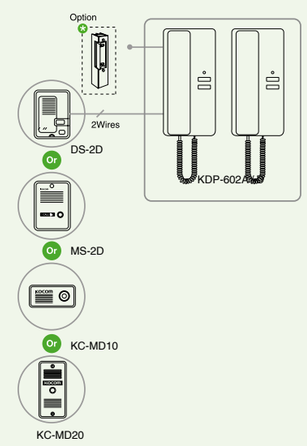

Dimension

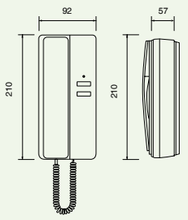

Doorphone & Interphone









Diagram

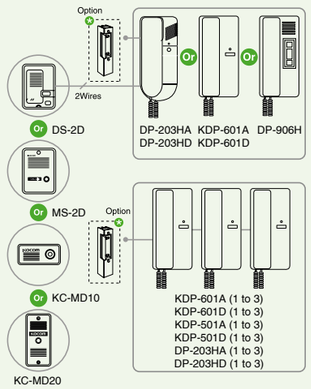

Dimension

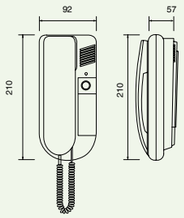

[DP-203HA / HD]

[KDP-501A/501D / KDP-601A / 601D / DP-906H]

- Audio conversation with visitor
- Door open function
- Upto 3 audio handset with outdoor panel connection
  (DP-203HA, DP-203HD,KDP-501A, KDP501D, KDP-601A, KDP-601D)
- Gentle electronic sound
- 4 melody selection (DP-906H)
- Easy installation (mount on the wall or desk)
- DC 12V Type available : DP-203HD (DC 12V)

Specifications

Model no.	DP-203HA, KDP-601A KDP-501A	DP-906H	DP-203HD (DC12V)	DP-203HD, KDP-601D KDP-501D
Power	AC110V or AC220V (±10%)		DC12V	DC6V (AA 1.5V battery) x 4ea
Power consumption	Max. 150mA			
Assurance temperature	0°C~+50°C			
Wiring	2wires			
Max. wiring distance	∅0.65 single cable : 300m, 5C-2V coaxial cable : 500m			
Mount type	Surface mount			
Dimension (mm)	92(W) x 210(H) x 57(D)			
Weight (Approx.)	0.5kg (1pc)			

The product may include option or additional functions.

[IP-201P / KIP-501P / KIP-601P]

- Duplex interphone
- Gentle electronic sound
- Easy wiring & installation (mount on the wall or desk)

Specifications

Model no.	IP-201P	KIP-501P	KIP-601P	KIP-501D
Power	DC6V (AA 1.5V battery) x 4ea			
Power consumption	Max. 150mA			
Assurance temperature	0°C~+50°C			
Wiring	2wires			
Max. wiring distance	∅0.65 single cable : 300m, 5C-2V coaxial cable : 500m			
Mount type	Surface mount			
Dimension (mm)	92(W) x 210(H) x 57(D)			
Weight (Approx.)	0.4kg (1pc)			

The product may include option or additional functions.

Diagram

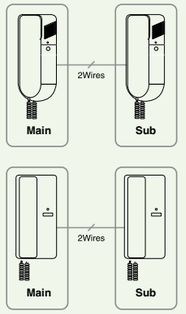

Dimension

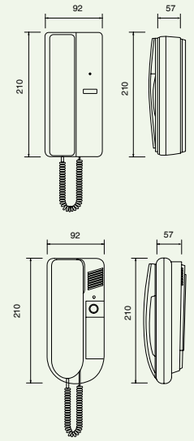

Intercom & Outdoor Panel

[KIC-301/304/308 (1CH/4CH/8CH) /300S (Sub)]



KIC-301



KIC-304

KIC-308

KIC-300S (Sub)

Diagram

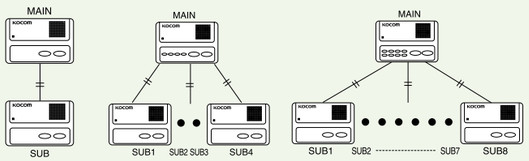

KIC-301 KIC-304 KIC-308

- Perfect conversation
- Delightful signal sound
- LED Indicator for call line
- Easily 2 wiring of polarity
- Power supply one side one used D.C 6V
- Easily mounted on wall, desk
- KIC-300S (Sub for 1CH, 4CH and 8CH)

Specifications

Model no.	KIC-301 / KIC-304 / KIC-308	KIC-300S
Power	DC 6V (LR6-AA 1.5V X 4)	Powered from main
Consumption	In use 30mA / Signal 150mA	
Signal sound	Electronic	
No. of wires	2 wires(polarity)	
Range	200m (∅0.65mm)	

The product may include option or additional functions.

Re-Seller: SIN CHEW ALARM PTE LTD

10 Upper Aljunied Link #06-02/03/04
Singapore 367904
Tel: (65) 62872788 Fax: (65) 62870856
Email: enquiry@sinchewalarm.com
http://www.sinchewalarm.com

[Outdoor Panel Series]

Multi House Series

Model no.	MSD-2B	MSD-3B	MSD-4B	KC-MD12	KC-MD14
					
Power	Powered from audio handset				
Assurance temperature	-20℃ ~ +50℃				
Body material	Aluminum			Metal	
Mount type	Flush mount			Surface & Flush	
Dimension (mm)	122(W) x 199(H) x 35(D)			132(W) x 197(H) x 25(D)	
Weight (Approx.)	0.6kg			1kg	
Audio handset Connection	DP-203HA / DP-203HD / KDP-601A / KDP-601D / DP-906H / KIP-222 / KDP-602A/D				

Single House Series

Model no.	MSD-1B	DS-2D	MS-2D(S)	MS-2D(B)	KC-MD10	KC-MD20
						
Power	Powered from audio handset					
Assurance temperature	-20℃ ~ +50℃					
Body material	Aluminum	Plastic	Metal			
Mount type	Flush mount	Surface mount				Flush & Surface mount
Dimension (mm)	122(W) x 199(H) x 35(D)	95(W) x 127(H) x 32(D)			77(W) x 38(H) x 18(D)	67(W) x 145(H) x 20(D)
Weight (Approx.)	0.6kg	0.5kg	0.6kg		0.3kg	0.5kg
Audio handset Connection	DP-203HA / DP-203HD / DP-203HD (DC 12V) / KDP-501A / KDP-501D / KDP-601A / KDP-601D / DP-906H / KIP-222 / KDP-602A/D					