Ruijie Reyee RG-EST350 V2 Wireless Bridge

Installation Guide

Document Version: V1.5
Date: November 5, 2025
Copyright © 2025 Ruijie Networks

Copyright

Copyright © 2025 Ruijie Networks

All rights are reserved in this document and this statement.

Any reproduction, excerption, backup, modification, transmission, translation or commercial use of this document or any portion of this document, in any form or by any means, without the prior written consent of Ruijie Networks is prohibited.

Trademarks including , are owned by Ruijie Networks.

All other trademarks or registered trademarks mentioned in this document are owned by their respective owners.

Disclaimer

The products, services, or features you purchase are subject to commercial contracts and terms, and some or all of the products, services, or features described in this document may not be available for you to purchase or use. Except for the agreement in the contract, Ruijie Networks makes no explicit or implicit statements or warranties with respect to the content of this document.

The names, links, descriptions, screenshots, and any other information regarding third-party software mentioned in this document are provided for your reference only. Ruijie Networks does not explicitly or implicitly endorse or recommend the use of any third-party software and does not make any assurances or guarantees concerning the applicability, security, or legality of such software. You should choose and use third-party software based on your business requirements and obtain proper authorization. Ruijie Networks assumes no liability for any risks or damages arising from your use of third-party software.

The content of this document will be updated from time to time due to product version upgrades or other reasons, Ruijie Networks reserves the right to modify the content of the document without any notice or prompt.

This manual is designed merely as a user guide. Ruijie Networks has tried its best to ensure the accuracy and reliability of the content when compiling this manual, but it does not guarantee that the content of the manual is completely free of errors or omissions, and all the information in this manual does not constitute any explicit or implicit warranties.

Preface

Intended Audience

This document is intended for:

- Network engineers
- Technical support and servicing engineers
- Network administrators

Technical Support

- The official website of Ruijie Reyee: https://reyee.ruijie.com
- Technical Support Website: https://reyee.ruijie.com/en-global/support
- Case Portal: https://www.ruijie.com/support/caseportal
- Community: https://community.ruijie.com
- Technical Support Email: service_rj@ruijie.com
- Online Robot/Live Chat: https://reyee.ruijie.com/en-global/rita

Conventions

1. Signs

The signs used in this document are described as below:

Danger

An alert that calls attention to safety operation instructions that if not understood or followed when operating the device can result in physical injury.

Warning

An alert that calls attention to important rules and information that if not understood or followed can result in data loss or equipment damage.

Caution

An alert that calls attention to essential information that if not understood or followed can result in function failure or performance degradation.

Note

An alert that contains additional or supplementary information that if not understood or followed will not lead to serious consequences.

Specification

An alert that contains a description of product or version support.

2. Note

This manual provides the device installation steps, hardware troubleshooting, module technical specifications, and specifications and usage guidelines for cables and connectors. It is intended for the users who have some experience in installing and maintaining network hardware. At the same time, it is assumed that the users are already familiar with the related terms and concepts.

Contents

Preface I

1 Product Overview 1

1.1 RG-EST350 V2 1

1.2 Package Contents 1

1.3 Appearance 2

1.3.1 Appearance 2

1.3.2 Port & Button 3

1.4 Device Specification 4

1.5 Power Specification 7

2 Safety Precautions 9

2.1 Safety Precautions 9

2.1.1 General Safety Precautions 9

2.1.2 Handling Safety 9

2.1.3 Electric Safety 9

2.2 Installation Environment Requirements 10

2.2.1 Environment Requirements 10

2.2.2 Lightning Protection Requirements 10

2.2.3 Temperature/ Humidity Requirements 10

2.2.4 Anti-interference Requirements 11

2.3 Tools 11

2.4 Checking before Installation 11

3 Installing the Device 12

3.1 Installation Procedure 12
3.2 Preparing 12
3.3 Precautions 13
3.4 Mounting the Device 13
3.4.1 Wall Mounting 13
3.4.2 Pole Mounting 14
3.5 Connecting Cables 14
3.6 Verifying Installation 15
4 Verifying Operating Status 16
4.1 Setting up Configuration Environment 16
4.2 Checking Environment before/after Power-on 16
5 Monitoring and Maintenance 17
5.1 Monitoring 17
5.2 Maintenance 17
6 Troubleshooting 18
6.1 General Troubleshooting Procedure 18
7 Appendix A Connectors and Media Description 19

1 Product Overview

1.1 RG-EST350 V2

The RG-EST350 V2 is an 802.11ac wireless bridge launched by Ruijie Reyee. It provides surveillance video backhaul function. RG-EST350 V2 works in the 5 GHz frequency band, supports two spatial streams and 2 x 2 MIMO, and provides a wireless link speed of up to 866 Mbps. The design of RG-EST350 V2 adapts to inclement outdoor environments such as the cold and humidity. This substantially simplifies installation and maintenance.

1.2 Package Contents

Table 1-1 Package Contents

No.	Item	Quantity
1	Device	2
2	Power adapter	2 Note: 24 V passive PoE adapter
3	Power cord	2
4	Mounting Bracket	2 x Ball joint mount 2 x Lock ring 2 x Mounting Bracket
5	Hose clamp	2
6	Screw	6 x Wall anchors 8 x Phillips pan head screws (self-tapping screws 4.2 mm x 19 mm)
7	User Manual	1
8	Warranty Card	1

Note

A normal delivery should contain the above mentioned items, which may differ from the actual delivery, depending on purchase contracts. Please check your goods carefully against the Package Contents or purchase contract. If you have any questions or there are any errors, please contact your distributor.

1.3 Appearance

1.3.1 Appearance

Figure 1-1 Appearance



Note

The label is located on the back of the device.

1.3.2 Port & Button

Figure 1-2 Port

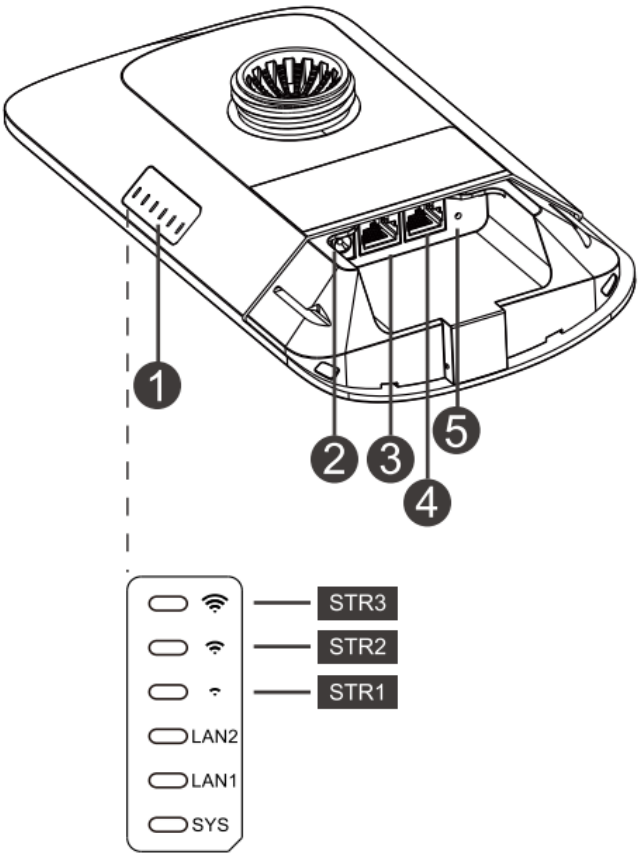

Table 1-1 Ports and button

No.	LED, Button and Port	Meaning
1	Status LEDs	6 status LEDs (1 x system status LED, 2 x Ethernet port LEDs and 3 x signal status LEDs)
2	12 V DC Port	Support 12 V/1 A DC power supply
3	LAN2 Port	10/100/1000BASE-T Ethernet port
4	LAN1/PoE Port	10/100/1000BASE-T Ethernet port, support 24 V/0.6 A PoE
5	Reset Button	● Press the button for less than 2 seconds, and the device will be rebooted. ● Press the button for over 5 seconds, and the device will be reset.

Table 1-2 LED

LED	State	Meaning
	Solid green	The device is working properly.

LED	State	Meaning
System status LED	Blinking green	The system is initializing, restoring factory settings, upgrading or resetting.
	Off	The device is not powered on.
LAN1/LAN2 Ethernet port LEDs	Solid green	The LAN port is link up and not receiving or transmitting data.
	Blinking green	The LAN port is link up and receiving or transmitting data.
	Off	The LAN port is not connected.
Signal status LEDs	STR1 blinking/on	The device is bridged.
	STR1 on	RSSI > -75 dBm
	STR1 on + STR2 blinking	RSSI > -73 dBm
	STR1 on + STR2 on	RSSI > -71 dBm
	STR1 on + STR2 on + STR3 blinking	RSSI > -68 dBm
	STR1 on + STR2 on + STR3 on	RSSI > -64 dBm

1.4 Device Specification

Table 1-3 Specification

System Specifications	Flash memory	8 MB
	RAM	128 MB DDR3
Wi-Fi Radio	Radio design	Single-radio 2 spatial streams ● Radio 1: 5 GHz, 2 spatial streams: 2 x 2, MIMO
	5 GHz channel width	Auto/20/40/80 MHz
	Wi-Fi standard	Wi-Fi 5 (IEEE 802.11ac) standard, compatible with IEEE 802.11a/n standards
	Receive sensitivity	802.11a: -89 dBm (6 Mbps), -80 dBm (24 Mbps), -76 dBm (36 Mbps), -71 dBm (54 Mbps) 802.11n: -83 dBm@MCS0, -65 dBm@MCS7, -83 dBm@MCS8, -65 dBm@MCS15 802.11ac HT20: -83 dBm (MCS0), -57 dBm (MCS9)

		802.11ac HT40: -79 dBm (MCS0), -54 dBm (MCS9) 802.11ac HT80: -76 dBm (MCS0), -51 dBm (MCS9)
	Modulation	802.11a/g/n: BPSK, QPSK, 16-QAM, 64-QAM 802.11ac: BPSK, QPSK, 16-QAM, 64-QAM, 256-QAM
	5 GHz Wi-Fi	Wi-Fi 5 (IEEE 802.11ac)
	Transmission rate	Maximum wireless data rate: 866 Mbps ● Radio 1: 5 GHz, 866 Mbps
	Operating band	IEEE 802.11a/n/ac: 5.150 GHz to 5.350 GHz IEEE 802.11a/n/ac: 5.470 GHz to 5.725 GHz IEEE 802.11a/n/ac: 5.725 GHz to 5.850 GHz Note: Available bands vary with countries and regions. To use the preceding frequency bands, ensure that your country or region supports these frequency bands. For details, see Channels for Countries & Regions (official website link to be added).
	Maximum transmit power	5 GHz: 29 dBm (single-stream power: 26 dBm) Note: The transmit power varies according to regulations in different countries and regions.
	Maximum transmit power (5 GHz)	Combined power: 29 dBm (single stream power: 26 dBm) Note: The transmit power varies according to regulations in different countries and regions.
	Highest QAM order	256
Antenna	Antenna horizontal orientation	31°
	Antenna vertical orientation	14°
	Antenna	5 GHz: 2 x 2 Built-in directional antenna, horizontal: 31°, vertical: 14°
	Antenna gain (5 GHz)	15 dBi
WLAN	Maximum bridge distance	5 km (3.11 miles)
Port Specifications	Number of fixed LAN ports	2

	Number of 10/100/1000BASE-T ports	2
	Reset button	1
	LEDs	1 x system status LED 2 x Ethernet port LEDs 3 x signal status LEDs
Power Supply and Consumption	Power supply	Power supply options: ● DC power adapter ● Passive PoE adapter
	Power input	Passive PoE adapter: ● Rated input voltage: 100 V AC to 240 V AC, 50 Hz to 60 Hz ● Rated input current: 0.5 A Max ● Rated output voltage: 24 V DC ● Maximum output current: 0.6 A
	Local power supply	Yes, one DC power connector (12 V, 1 A)
	Number of PoE In ports	1
	Dimensions of the DC connector	Outer Diameter: 5.50 mm ± 0.05 mm (0.22 in. ± 0.002 in.) Inner Diameter: 2.10 mm ± 0.05 mm (0.08 in. ± 0.002 in.) Depth: 9 mm (0.35 in.)
	Maximum power consumption	9 W
Dimensions and Weight	Product dimensions (W x D x H)	230 mm x 132 mm x 48 mm (9.06 in. x 5.20 in. x 1.89 in.) (excluding mounting bracket)
	Color	Elegant white
	Weight	0.49 kg (1.09 lbs) (without packaging materials)
	Package dimensions (W x D x H)	356 mm x 326 mm x 78 mm (14.02 in. x 12.83 in. x 3.07 in.)
	Shipping weight	2.15 kg (4.74 lbs)
Environment and Reliability	Surge protection	Service port: ±4 kV for common mode Power connector: ±4 kV for common mode and ±2 kV differential mode
	Cooling	Natural cooling

	Altitude	Operating altitude: -500 m to +5,000 m (-1,640.42 ft. to +16,404.20 ft.) Storage altitude: -500 m to +5,000 m (-1,640.42 ft. to +16,404.20 ft.)
	IP rating	IP54
	Operating temperature	–30°C to +65°C (–22ºF to +149ºF)
	Storage temperature	–40°C to +70°C (–40°F to +158°F)
	Operating humidity	5% RH to 95% RH (non-condensing)
	Storage humidity	5% RH to 95% RH (non-condensing)
	MTBF	400,000 hours (about 45 years)
	ESD protection	Standard test: contact discharge=8 kV, air discharge=15 kV, Class B
	Mounting options	Wall/Pole
Certification and Regulatory Compliance	EMC	EN 55032 EN 55035 EN 61000-3-3 EN 61000-3-2 EN 301489-1 EN 301489-3 EN 301489-17
	Safety compliance	EN62368-1
	Certification	CE, FCC, CB, ISED, cTUVus

1.5 Power Specification

RG-EST350 V2 adopts 12 V/1 A DC or 24 V PoE power supply (standard accessory: 24 V/0.6 A PoE adapter).

Figure 1-3 Passive PoE Adapter

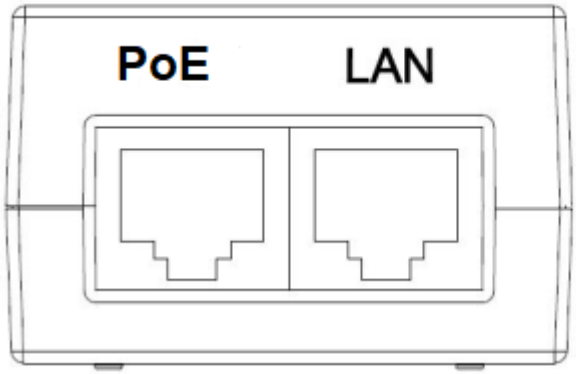

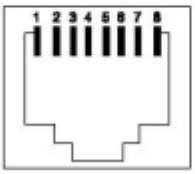

- RJ45 Connector for LAN: 1, 2, 3, 4, 5, 6, 7 and 8 are data cables.
- RJ45 Connector for PoE: 1, 2, 3, 4, 5, 6, 7 and 8 are data cables. 4 and 5 connect the positive post. 7 and 8 connect the negative post.

Caution

- For DC power supply, please use the 12 V/1 A adapter certified by Ruijie (If needed, you can buy it from Ruijie).
- For PoE power supply, please use the PoE adapter provided with the product. Do not use a switch or a PoE adapter of another model for power supply. Otherwise, the device may be damaged.

2 Safety Precautions

2.1 Safety Precautions

Note

- To prevent device damage and physical injury, please read carefully the safety recommendations described in this chapter.
- The following safety suggestions do not cover all possible dangers.

2.1.1 General Safety Precautions

- Do not expose the device to high temperature, dusts, or harmful gases. Do not install the device in an inflammable or explosive environment. Keep the device away from EMI sources such as large radar stations, radio stations, and substations. Do not subject the device to unstable voltage, vibration, and noises.
- The installation site should be far away from the sea. Keep the device at least 500 meters away from the seaside and do not face it toward the wind from the sea.
- The installation site should be free from water flooding, seepage, dripping, or condensation. The installation site shall be selected according to network planning and features of communications device, and considerations such as climate, hydrology, geology, earthquake, electric power, and transportation.

Caution

Please follow the correct methods described in the installation guide to install and remove the device.

2.1.2 Handling Safety

- Prevent the device from being frequently handled.
- Cut off all the power supplies and unplug all power cords before moving or handling the device.

2.1.3 Electric Safety

Warning

- Improper or incorrect electric operations may cause a fire, electric shock, and other accidents, and lead to severe and fatal personal injury and device damage.
- Direct or indirect contact with high voltage or mains power supply via wet objects may cause fatal dangers.

- Observe local regulations and specifications during electric operations. Only personnel with relevant qualifications can perform such operations.
- Check whether there are potential risks in the work area. For example, check whether the power supply is grounded, whether the grounding is reliable, and whether the ground is wet.
- Find out the location of the emergency power supply switch in the room before installation. First cut off the power supply in case of an accident.

- Be sure to make a careful check before you shut down the power supply.
- Do not place the device in a damp/wet location. Do not let any liquid enter the device.
- Keep the device far away from the grounding or lightning protection devices of power device.
- Keep the device away from high-power radio stations, radar stations, and high-frequency high-current devices.

2.2 Installation Environment Requirements

To ensure normal operation and a prolonged useful life of the device, the installation site must meet the following requirements.

2.2.1 Environment Requirements

- Install the device in a well-ventilated environment. If it is installed in a closed room, make sure there is a good cooling system.
- Make sure the site is sturdy enough to support the device and its accessories.
- Make sure the site has enough space for installing the device and leave sufficient space around the device for ventilation.

2.2.2 Lightning Protection Requirements

- When the connection cable between the main grounding conductor and local equipotential earthing terminal board (LEB) on each floor is shorter than 2 meters, use a stranded copper wire with a sectional area not less than 1.318 mm^2 (16 AWG) for the connection cable.
- Use a shielded network cable if possible, ensure that devices connected to both ends of the shielded network cable are reliably grounded, and make sure that the sheath of the shielded network cable is also grounded if possible. If no shielded network cable is available, wire the network cable through a steel pipe and bury the steel pipe for lead-in, and properly ground both ends of the steel pipe.
- No additional lightning protector is required as a high-profile lightning protector is built in the device and the antenna port and power port support 4 kV lightning protection. If a lightning protector of a higher profile is available, configure the lightning protector optionally. Before the configuration, connect the lightning protector to the ground cable.

2.2.3 Temperature/ Humidity Requirements

To ensure the normal operation and prolonged service life of the device, maintain an appropriate temperature and humidity in the equipment room. The equipment room with too high or too low temperature and humidity for a long period may damage the device.

- In an environment with high humidity, the insulating material may have bad insulation or even leak electricity and sometimes the materials may suffer from mechanical performance change and metallic parts may get rusted.
- In an environment with low humidity, the insulating strip may dry and shrink, and static electricity is prone to occur and damage the internal circuits of the device.
- In an environment with high temperature, the device is subjected to even greater harm, as its performance may degrade significantly and its useful life may be shortened in the case of long-term exposure that expedites the aging process.

Table 2-1 Temperature and Humidity Requirements

Operating Temperature	Operating Humidity:
–30°C to +65°C (–22ºF to +149ºF)	5% RH to 95% RH (non-condensing)

2.2.4 Anti-interference Requirements

- Take interference prevention measures for the power supply system.
- Keep the device far away from the grounding or lightning protection devices of power device.
- Keep the device far away from high-power radio stations, radar stations, and high-frequency high-current devices.

2.3 Tools

Table 2-2 Tools

Common Tools	Marker, Philips screwdriver, drill, hammer, hose clamp, related copper and fiber cables, diagonal pliers, cable ties
Special Tools	Anti-static glove, stripping pliers, crimping pliers, crimping pliers for the crystal head, wire cutter, waterproof tape
Meter	Multimeter, network cable tester
Related devices	PC, screen, keyboard

Note

The installation tools are not included in the scope of delivery and should be purchased separately.

2.4 Checking before Installation

Please check your goods carefully against the Package Contents. If you have any questions or there are any errors, please contact your distributor.

3 Installing the Device

Caution

Before installing the device, make sure you have carefully read the requirements described in Chapter 2.

3.1 Installation Procedure

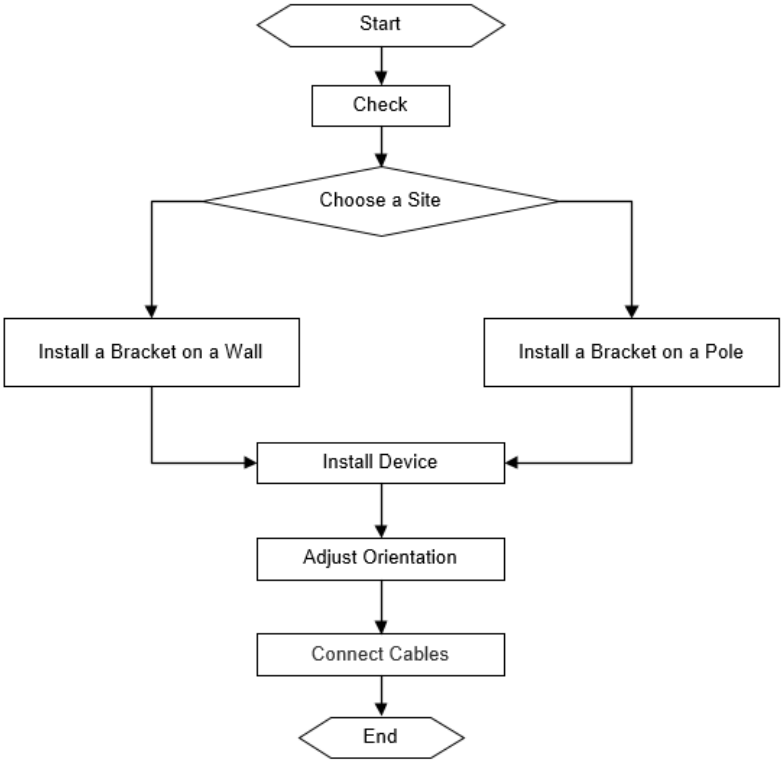

3.2 Preparing

Carefully plan and arrange the installation location, networking mode, power supply, and cabling before installation. Confirm the following requirements before installation:

- The installation position provides sufficient space for heat dissipation.
- The installation position meets the temperature and humidity requirements of the device.
- The power supply and required current are available in the installation position.
- The selected power supply modules meet the system power requirement.
- The network cables have been deployed in the installation position.
- The installation site meets all described requirements.
- The device meets the customers' requirements.

3.3 Precautions

The device can be mounted on a wall and a pole (diameter: 35 mm to 89 mm). If the diameter of the pole is out of the range, the hose clamp is customer-supplied. In this case, we strongly recommend you to use a hose clamp with thickness of 2.5mm at least. Otherwise, the device could fall down and cause injuries. When multiple bridges are installed at close range, in order to avoid interference between bridges, the horizontal distance between two bridges should be 2m and the vertical distance be 0.5m, or the horizontal angle of the two bridges should be greater than 120 degrees. The installation site can vary due to on-the-spot surveys conducted by technical personnel.

Please make full preparations as described in Chapter 2 and observe the following precautions before installing the device.

- Please use the 24 V/0.6 A PoE power adapter (Pin 4 and 5 connect to the positive post. Pin 7 and 8 connect to the negative post) delivered with the device or use a power adapter of the same specification.
- The PoE adapter supports power supply over a 100-meter network cable(CAT5e/6/6a/7/8). Before connecting the network cable, make sure that the power supply module is off.
- Make sure that the connector of the power module is fully seated.

3.4 Mounting the Device

Caution

- It is recommended to install the device where you can get the optimal coverage.
- The image shown here is for indicative purpose only. The actual product may differ.

3.4.1 Wall Mounting

(1) Drill holes into the marked positions and insert wall anchors.

(2) Pass the ball joint mount through the lock ring and align it with the internal threaded hole at the bottom of the device. Then tighten the lock ring to secure it on the device.

(3) Secure the mounting bracket on the wall.

(4) Install the device to the mounting bracket.

(5) Adjust the device angle.

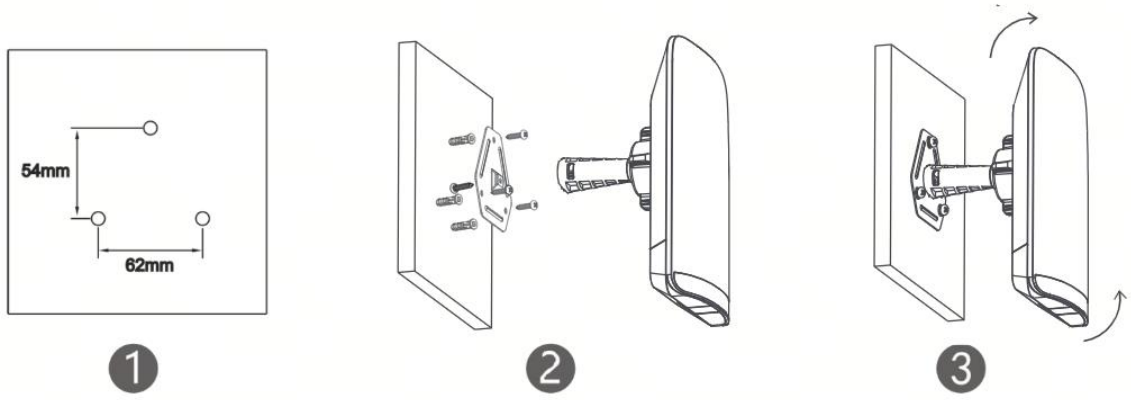

3.4.2 Pole Mounting

(1) Pass the ball joint mount through the lock ring and align it with the internal threaded hole at the bottom of the device. Then tighten the lock ring to secure it on the device.

(2) Thread the hose clamp through the small hole of the ball joint mount and secure the hose clamp on a pole.

(3) Adjust the device angle.

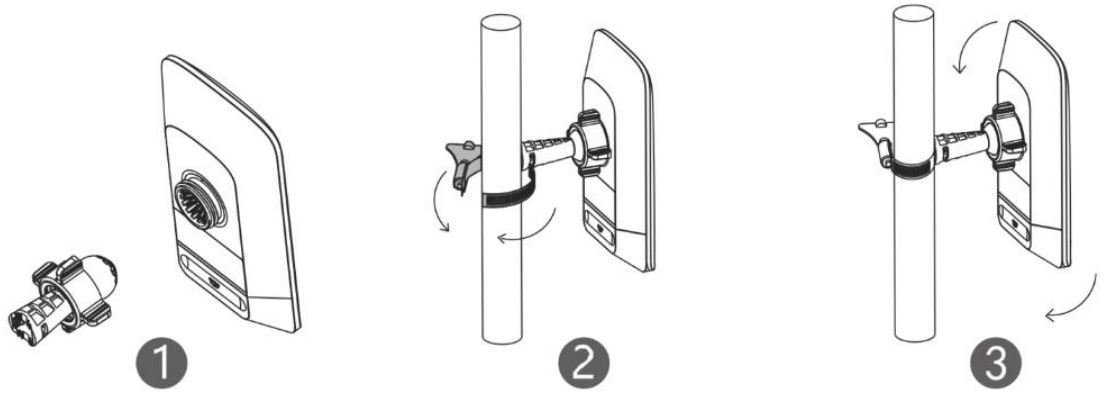

3.5 Connecting Cables

(1) Select a cable (CAT5e or higher) according to the distance between the wireless bridge and the PoE adapter.

(2) Plug one end of the cable into the PoE port of the PoE adapter and plug the other end into the LAN1/PoE port of the device. Connect the LAN port of the PoE adapter to the server or camera. Plug the PoE adapter into 220 V power socket.

Or you can connect the DC port of the device to the 12 V DC adapter, and connect the LAN port of the device to the server or camera.

Figure 3-1 Connecting Cables

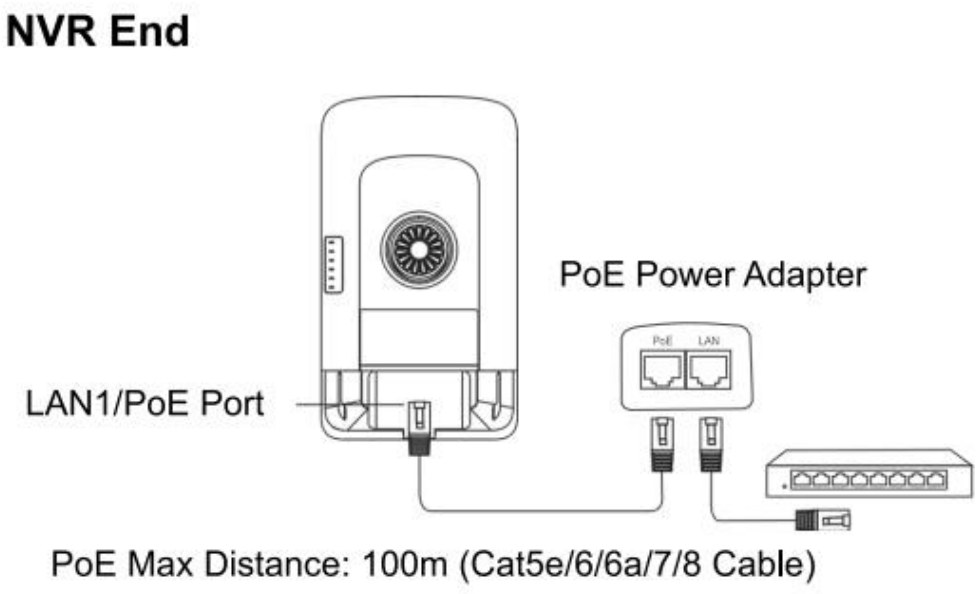

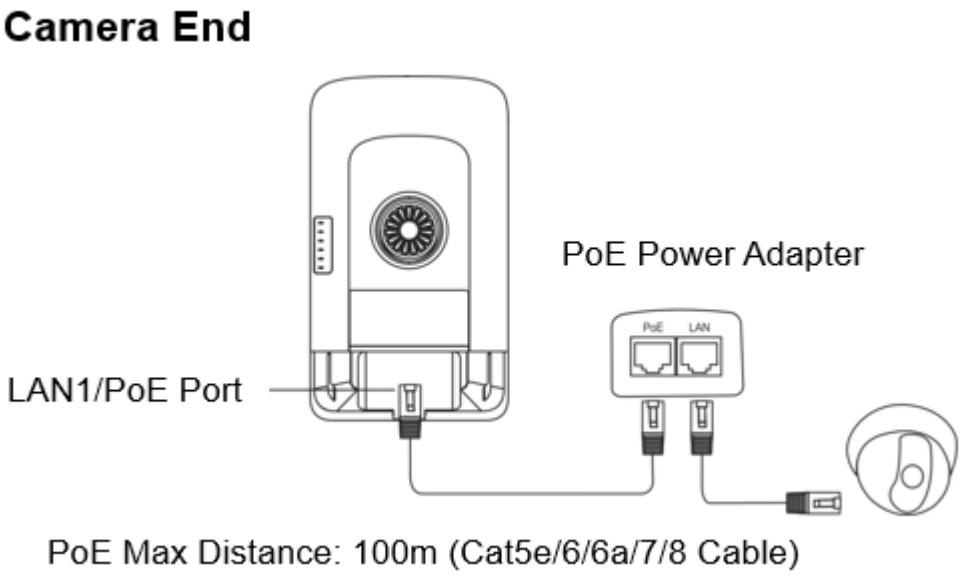

Warning

- Remember to install the bottom cover for waterproof and dustproof purpose.
- Please do not use a switch or a PoE adapter of another model. Otherwise, the device may be damaged.

3.6 Verifying Installation

(1) Checking the Device

- Verify if the external power supply matches the specification.
- Verify that the device has been fastened and will not move or tilt.

(2) Checking the Power Supply

- Make sure all power cables are properly connected.
- Make sure the device is operational after power-on.

4 Verifying Operating Status

4.1 Setting up Configuration Environment

Power on the device via 12 V DC or 24 V PoE power supply. Make sure all power cables are properly connected and meet the safety requirement.

4.2 Checking Environment before/after Power-on

(1) Before power-on, check the following items:

- Verify that the power supply is properly connected.
- Verify that the input voltage matches the specification.

(2) After power-on, check the following item (Recommended):

- Check the indicator status.

5 Monitoring and Maintenance

5.1 Monitoring

When the RG-EST350 V2 is running, you can monitor the device status by observing the indicator.

5.2 Maintenance

If a hardware error occurs, please contact Ruijie Reyee Technical support for help.

6 Troubleshooting

6.1 General Troubleshooting Procedure

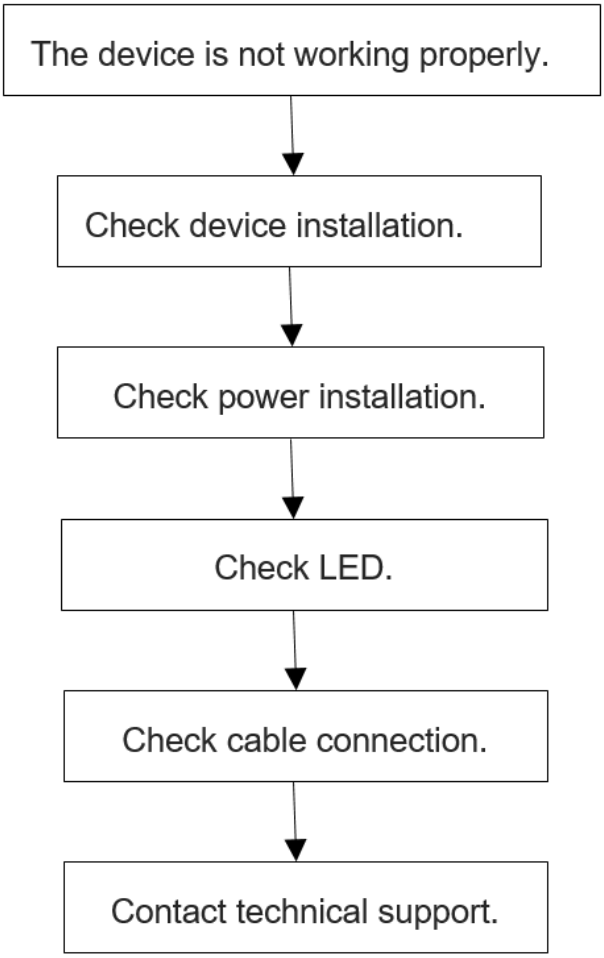

7 Appendix A Connectors and Media Description

1000BASE-T/100BASE-TX/10BASE-T

The 1000BASE-T/100BASE-TX/10BASE-T is a 10/100/1000 Mbps auto-negotiation port that supports auto MDI/MDIX.

Compliant with IEEE 802.3ab, 1000BASE-T requires Category 5e 100-ohm UTP or STP (STP is recommended) with a maximum distance of 100 meters (328 feet).

1000BASE-T requires all four pairs of wires be connected for data transmission, as shown in Figure 7-1.

Figure 7-1 1000BASE-T Connection

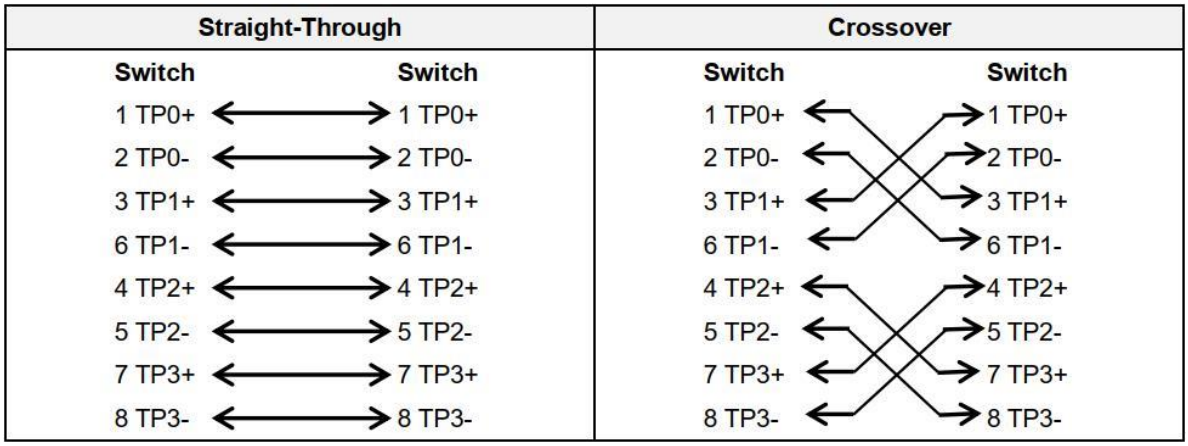

10BASE-T uses Category 3, 4, 5 100-ohm UTP/STP and 1000BASE-T uses Category 5 100-ohm UTP/STP for connections. Both support a maximum length of 100 meters. Figure 7-2 shows 100BASE-TX/10BASE-T pin assignments.

Figure 7-2 100BASE-TX/10BASE-T Pin Assignments

Pin	Socket	Plug
1	Input Receive Data+	Output Transmit Data+
2	Input Receive Data-	Output Transmit Data-
3	Output Transmit Data+	Input Receive Data+
6	Output Transmit Data-	Input Receive Data-
4,5,7,8	Not used	Not used

Figure 7-3 shows wiring of straight-through and crossover cables for 100BASE-TX/10BASE-T.

Figure 7-3 100BASE-TX/10BASE-T Connection

