Ruijie Reyee RG-ES1 Series Switch

RG-ES106D-P&RG-ES126S-LP&RG-ES110D-P&RG-ES118S-LP&
RG-ES116G&RG-ES124GD&RG-ES110GDS-P&RG-ES118GS-P

Installation Guide

Document Version: V1.**8**
Date: May 12, 2026
Copyright © 2026 Ruijie Networks

Copyright

Copyright © 2026 Ruijie Networks

All rights are reserved in this document and this statement.

Without the prior written consent of Ruijie Networks, no organization or individual is permitted to reproduce, extract, back up, modify, or distribute the content of this document in any manner or form. It is also prohibited to translate the document into other languages or use any or all parts of it for commercial purposes.

Ruijie, Reyee and other Ruijie networks logos are trademarks of Ruijie Networks.

All other trademarks or registered trademarks mentioned in this document are owned by their respective owners.





Disclaimer

The products, services, or features that you purchase are subject to commercial contracts and terms. It is possible that some or all of the products, services, or features described in this document may not be available for purchase or use. Unless agreed upon otherwise in the contract, Ruijie Networks does not provide any explicit or implicit statements or warranties regarding the content of this document.

The names, links, descriptions, screenshots, and any other information regarding third-party software mentioned in this document are provided for your reference only. Ruijie Networks does not explicitly or implicitly endorse or recommend the use of any third-party software and does not make any assurances or guarantees concerning the applicability, security, or legality of such software. You should choose and use third-party software based on your business requirements and obtain proper authorization. Ruijie Networks assumes no liability for any risks or damages arising from your use of third-party software.

The content of this document is subject to constant change due to product version upgrades or other reasons. Thus, Ruijie Networks reserves the right to modify the content of the document without prior notice or prompt.

This manual serves solely as a user guide. While Ruijie Networks endeavors to ensure the accuracy and reliability of the content when compiling this manual, it does not guarantee that the content of the manual is free of errors or omissions. All information contained in this manual does not constitute any explicit or implicit warranties.

Preface

Intended Audience

This document is intended for:

- Network engineers
- Technical support and servicing engineers
- Network administrators

Technical Support

- Ruijie Reyee website: https://reyee.ruijie.com
- Online support center: https://reyee.ruijie.com/en-global/support
- Case portal: https://www.ruijie.com/support/caseportal
- Community: https://community.ruijie.com
- Email support: service_rj@ruijie.com
- Live chat: https://reyee.ruijie.com/en-global/rita

Conventions

1. Signs

The signs used in this document are described as follows:

Danger

An alert that calls attention to safety instruction that if not understood or followed can result in personal injury.

Warning

An alert that calls attention to important rules and information that if not understood or followed can result in data loss or equipment damage.

Caution

An alert that calls attention to essential information that if not understood or followed can result in function failure or performance degradation.

Note

An alert that contains additional or supplementary information that if not understood or followed will not lead to serious consequences.

Specification

An alert that contains a description of product or version support.

2. Notes

This manual provides installation steps, troubleshooting, technical specifications, and usage guidelines for cables and connectors. It is intended for users who want to understand the above and have extensive experience in network deployment and management, and assume that users are familiar with related terms and concepts.

Contents

Preface I

1 Product Overview 1

1.1 RG-ES106D-P 1

1.1.1 Technical Specifications 1

1.1.2 Product Appearance 3

1.1.3 Heat Dissipation 5

1.1.4 LEDs 5

1.2 RG-ES126S-LP 5

1.2.1 Technical Specifications 5

1.2.2 Product Appearance 7

1.2.3 Heat Dissipation 8

1.2.4 LEDs 8

1.3 RG-ES110D-P 9

1.3.1 Technical Specifications 9

1.3.2 Product Appearance 11

1.3.3 Heat Dissipation 13

1.3.4 LEDs 13

1.4 RG-ES118S-LP 14

1.4.1 Technical Specifications 14

1.4.2 Product Appearance 16

1.4.3 Heat Dissipation 18

1.4.4 LEDs 18

1.5 RG-ES116G 19

1.5.1 Technical Specifications 19
1.5.2 Product Appearance 21
1.5.3 Heat Dissipation 22
1.5.4 LEDs 22
1.6 RG-ES124GD 23
1.6.1 Technical Specifications 23
1.6.2 Product Appearance 25
1.6.3 Heat Dissipation 26
1.6.4 LEDs 27
1.7 RG-ES110GDS-P 27
1.7.1 Technical Specifications 27
1.7.2 Product Appearance 29
1.7.3 Heat Dissipation 31
1.7.4 LEDs 31
1.8 RG-ES118GS-P 32
1.8.1 Technical Specifications 32
1.8.2 Product Appearance 34
1.8.3 Heat Dissipation 36
1.8.4 LEDs 36
2 Preparation Before Installation 37
2.1 Safety Suggestions 37
2.1.1 Installation 37
2.1.2 Movement 37
2.1.3 Electricity 37

2.1.4 Static Discharge Damage Prevention....38
2.1.5 Laser....38
2.2 Installation Site Requirements....38
2.2.1 Ventilation....39
2.2.2 Temperature and Humidity....39
2.2.3 Cleanness....39
2.2.4 Interference Resistance....40
2.2.5 Grounding....40
2.2.6 Lightning Resistance....42
2.2.7 EMI....42
2.3 Installation Tools....42
3 Product Installation....44
3.1 Installation Flowchart....44
3.2 Precautions Before Installation....44
3.3 Installing the RG-ES100....45
3.3.1 Mounting the Switch in a Standard 19-inch Rack....45
3.3.2 Mounting the Switch Against a Wall....47
3.3.3 Mounting the Switch on a Table....47
3.4 Checking After Installation....48
3.5 Adding an Unmanaged Device to the Topology....48
3.5.1 Scanning the QR Code of the Unmanaged Device....48
3.5.2 Adding an Unmanaged Device Manually....49
4 System Commissioning....51
4.1 Startup Check....51

4.1.1 Checking Before the Device Is Powered On 51
4.1.2 Checking After Program Startup (Recommended) 51
5 Maintenance and Troubleshooting 52
5.1 Troubleshooting Procedure 52
5.2 Troubleshooting Common Faults 52
6 Appendix 54
6.1 Connectors and Media 54
6.1.1 10/100/1000BASE-T Port 54
6.1.2 Optical Cable Connection 55
6.2 SFP Transceivers 55
6.3 Lightning Protection 58
6.3.1 Installing the AC Power Arrester (Power Strip with Surge Protection) 58
6.3.2 Installing the Ethernet Port Arrester 59
6.4 Recommended Cabling 60
6.4.1 Requirement for the Minimum Bend Radius of Cables 60
6.4.2 Precautions for Cable Bundling 61
6.5 Site Selection 63

1 Product Overview

The RG-ES100 series switches include the following models.

Model	10/100Base-TX Auto-sensing Ethernet Port	10/100/1000Base-T Auto-sensing Ethernet Port	1000Base-X SFP Port	Console Port
RG-ES106D-P	6 (ports 1–4 support PoE/PoE+)	N/A	N/A	N/A
RG-ES126S-LP	24 (ports 1–24 support PoE/PoE+)	2	1 (combo)	N/A
RG-ES110D-P	8 (ports 1–8 support PoE/PoE+)	2	N/A	N/A
RG-ES116G	N/A	16	N/A	N/A
RG-ES124GD	N/A	24	N/A	N/A
RG-ES118S-LP	16 (ports 1–16 support PoE/PoE+)	2	2 (combo)	N/A
RG-ES110GDS-P	N/A	8	2	N/A
RG-ES118GS-P	N/A	16	2	N/A

Note

- 1000Base-T is backward compatible with 100Base-TX and 10Base-T.
- The SFP ports cannot be backward compatible with 100Base-FX.

1.1 RG-ES106D-P

1.1.1 Technical Specifications

Parameter Type	Parameter Name	RG-ES106D-P
System Specifications	Forwarding rate	0.89 Mpps
	Switching capacity	1.2 Gbps(bit/s)
	Flash memory	2 KB（E2PROM）
Port Specifications	Total number of RJ45 ports	6

Parameter Type	**Parameter Name**	**RG-ES106D-P**
	Number of 10/100BASE-T ports	6
	LEDs	1 x system status LED 6 x Ethernet port LEDs 4 x PoE power supply LEDs
	DIP switch	Switchover in three modes: 1. Flow Control On 2. Flow Control Off 3. Port Isolation
Power Supply and Consumption	Power supply	DC power adapter
	Power input	Rated voltage range: 100-240V~ Maximum voltage range: 90-264V~ Frequency: 50/60Hz Rated current: 1.5A
	Maximum power consumption	7 W (with no PoE load) 67 W (with PoE full load)
	Number of PoE Out ports	4
	Number of PoE/PoE+ Out ports	4
	PoE Out standard	PoE/PoE+ (IEEE 802.3af/at)
	PoE power pins	1–2 (+), 3–6 (-)
	PoE budget per port	30 W
	PoE budget	54 W
Dimensions and Weight	Product dimensions (W x D x H)	100 mm x 100 mm x 26 mm (3.94 in. x 3.94 in. x 1.02 in.)
	Weight	210 g (0.46 lbs) (without packaging materials)
	Shipping weight	0.60 kg (1.32 lbs)
Environment and Reliability	Mounting options	Wall/Desk
	Hot swapping of cables	Hot swapping supported by the service port and power connector

Parameter Type	**Parameter Name**	**RG-ES106D-P**
	Fan	Fanless design
	Cooling	Natural cooling
	MTBF	200,000 hours
	ESD protection	Air discharge: 8 kV Contact discharge: 6 kV
	Surge protection	Service port: ±4 kV for common mode Power connector: ±4 kV for common mode and ±2 kV for differential mode
	Operating temperature	0°C to 45°C (32°F to 113°F)
	Storage temperature	–40°C to +70°C (–40°F to +158°F)
	Operating humidity	10% RH to 90% RH (non-condensing)
	Storage humidity	5% RH to 95% RH (non-condensing)
	Altitude	Operating altitude: –500 m to +5,000 m (–1,640.42 ft. to +16,404.20 ft.) Storage altitude: –500 m to +5,000 m (–1,640.42 ft. to +16,404.20 ft.)
Certification and Regulatory Compliance	EMC	EN 55032 EN IEC 61000-3-2 EN 61000-3-3 EN 55035 EN 300 386
	Safety compliance	EN 62368-1 IEC 62368-1
	Certification	CE

Caution

Device operation in a residential environment may cause radio interference.

1.1.2 Product Appearance

The RG-ES106D-P provides six 10/100Base-TX auto-sensing Ethernet ports on the front panel, and a port mode switchover button, a system status LED, a power socket, and a grounding pole on the back panel.

Figure1-1 Appearance of the RG-ES106D-P



1. Front Panel

Figure1-2 Front Panel of the RG-ES106D-P

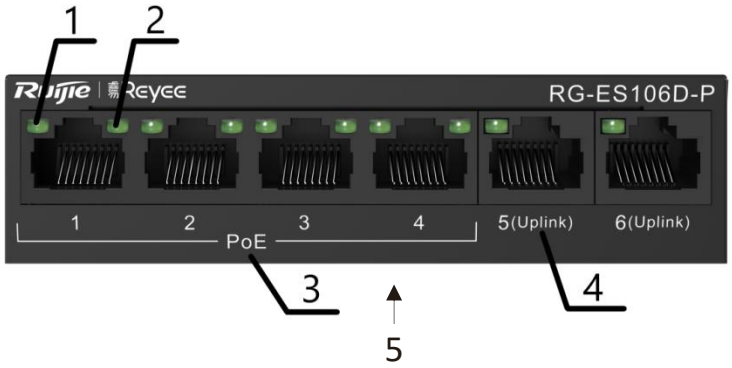

Note:	1. Electrical port status LED 2. PoE status LED 3. 10/100Base-TX PoE port 4. 10/100Base-TX auto-sensing Ethernet port 5. Nameplate on the bottom of the device

2. Back Panel

Figure1-3 Back Panel of the RG-ES106D-P

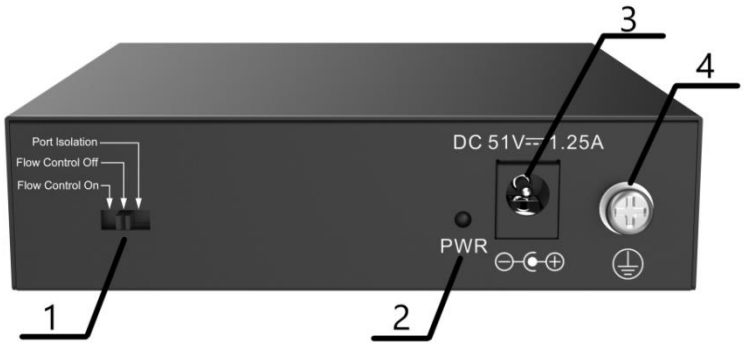

Note:	1. Port mode switchover button 2. System status LED 3. DC power socket 4. Grounding pole

1.1.3 Heat Dissipation

The RG-ES106D-P adopts natural heat dissipation, thereby ensuring normal operation. You must maintain a minimum clearance of 100 mm (3.94 in.) around the RG-ES106D-P. It is recommended that you clean the RG-ES106D-P once every three months to avoid dust from blocking vents.

1.1.4 LEDs

LED	Panel Identification	State	Meaning
System status LED	PWR	Off	The switch is powered off.
		Solid green	The switch is operational.
RJ45 port status LED	Upper left corner of the port	Off	The port is not connected.
		Solid green	The port is connected at a rate of 10/100 Mbps.
		Blinking green	The port is receiving or sending traffic at a rate of 10/100 Mbps.
		Solid orange	A 10/100 Mbps link is established on the port.
		Blinking orange	The port is receiving and sending data at 10/100 Mbps.
RJ45 PoE status LED	Upper left corner of the port	Off	PoE does not supply power.
		Solid green	PoE is operational.

1.2 RG-ES126S-LP

1.2.1 Technical Specifications

Model	RG-ES126S-LP
Ports	Ports 1 to 24 are 10/100Base-TX auto-sensing Ethernet ports, and support PoE/PoE+. Ports 25 and 26 are 10/100/1000Base-T auto-sensing Ethernet ports, and do not support PoE or PoE+.

Model	RG-ES126S-LP
	Port 26F is a 1000Base-X SFP port multiplexed with port 26 as a combo port, and the SFP port is preferred.
Power Supply	AC input Rated voltage range: 100 V AC to 240 V AC Maximum voltage range: 90 V AC to 264 V AC Frequency: 50/60 Hz Rated current: 4 A (max.)
EEE	Not supported
PoE	PoE/PoE+ support Ports 1 to 24 support PoE/PoE+ with the maximum power output of 30 W per port. Ports 25 and 26 do not support PoE or PoE+. The overall maximum output power of PoE or PoE+ is 180 W.
Power Consumption	Less than 10 W with no PoE load Less than 220 W with PoE full load
Operating Temperature	0°C to 45°C (32°F to 113°F)
Storage Temperature	-40°C to +70°C (-40°F to +158°F)
Operating Humidity	10% to 90% RH
Storage Humidity	5% to 95% RH
DIP Switch	Sswitchover in three modes: 1. Flow Control On 2. Flow Control Off 3. Port Isolation When port isolation is enabled, ports 1 to 22 are isolated from each other, but can communicate with ports 25, 26, and 26F.
Number of Fans	Fanless
Temperature Warning	Not supported
Accessing Optical Module Information	Not supported

Model	RG-ES126S-LP
Certification	CE
Earth Leakage Current	≤ 1.5 mA
Dimensions (W x D x H)	440 mm x 208 mm x 44 mm (17.32 in. x 8.19 in. x 1.73 in.)
Net Weight	2.30 kg

Caution

Device operation in a residential environment may cause radio interference.

1.2.2 Product Appearance

The RG-ES126S-LP provides twenty-four 10/100Base-TX auto-sensing Ethernet ports, two 10/100/1000Base-T auto-sensing Ethernet ports, one 1000Base-X SFP port, system status LEDs, a port mode switchover button on the front panel, and a power socket and a grounding pole on the back panel.

Figure1-4 Appearance of the RG-ES126S-LP



1. Front Panel

Figure1-5 Front Panel of the RG-ES126S-LP

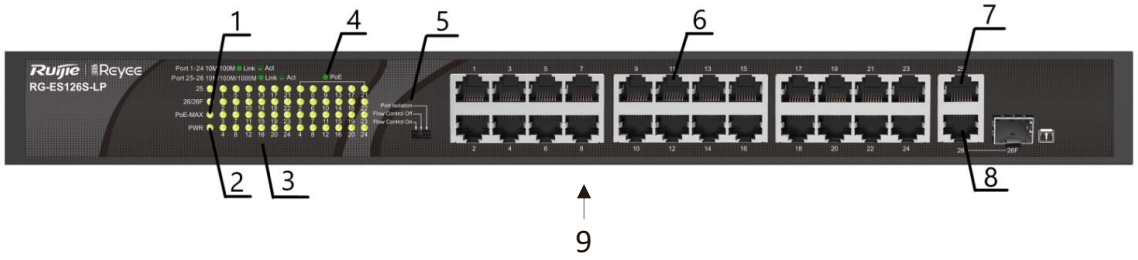

Note:	1. PoE overload LED 2. System status LED 3. Port status LED 4. PoE status LED 5. Port mode switchover button	6. 10/100Base-TX auto-sensing Ethernet port 7. 10/100/1000Base-T auto-sensing Ethernet port 8. 10/100/1000Base-T combo port 9. Nameplate on the bottom of the device

2. Back Panel

Figure1-6 Back Panel of the RG-ES126S-LP



Note:	1. Grounding pole 2. AC power socket

1.2.3 Heat Dissipation

The RG-ES126S-LP adopts fans for heat dissipation, thereby ensuring normal operation. You must reserve 10 cm distance space at both sides and the back plane of the cabinet to allow airflow. It is recommended that you clean the RG-ES126S-LP once every three months to avoid dust from blocking vents.

1.2.4 LEDs

LED	Panel Identification	State	Meaning
System status LED	PWR	Off	The switch is powered off.
		Solid green	The switch is operational.
PoE overload LED	PoE-max	Off	The overall PoE output does not reach the maximum power.
		Solid green	The overall PoE output reaches the maximum power.
	Link/Act	Off	The port is not connected.

LED	Panel Identification	State	Meaning
RJ45 port status LED	(1–24, 25, 26/26F)	Solid green	The port is connected at a rate of 10/100/1000 Mbps.
		Blinking green	The port is receiving or sending traffic at a rate of 10/100/1000 Mbps.
		Solid orange	A 10/100 Mbps link is established on the port.
		Blinking orange	The port is receiving and sending data at 10/100 Mbps.
RJ45 PoE status LED	PoE (1–24)	Off	PoE does not supply power.
		Solid green	PoE is operational.

1.3 RG-ES110D-P

1.3.1 Technical Specifications

Parameter Type	Parameter Name	RG-ES110D-P
System Specifications	Forwarding rate	4.17 Mpps
	Switching capacity	5.6 Gbps(bit/s)
	Flash memory	1MB
Port Specifications	Total number of RJ45 ports	10
	Number of 10/100BASE-T ports	8
	Number of 10/100/1000BASE-T ports	2
	LEDs	1 x system status LED 10 x Ethernet port LEDs 8 x PoE power supply LEDs
	DIP switch	Switchover in three modes: 1. Flow Control On 2. Flow Control Off 3. Port Isolation

Parameter Type	**Parameter Name**	**RG-ES110D-P**
Power Supply and Consumption	Power supply	DC power adapter
	Power input	Rated voltage range: 100-240V~ Maximum voltage range: 90-264V~ Frequency: 50/60Hz Rated current: 3.0A
	Maximum power consumption	8 W (with no PoE load) 129 W (with PoE full load)
	Number of PoE Out ports	8
	Number of PoE/PoE+ Out ports	8
	PoE Out standard	PoE/PoE+ (IEEE 802.3af/at)
	PoE power pins	1–2 (+), 3–6 (-)
	PoE budget per port	30 W
	PoE budget	110 W
Dimensions and Weight	Product dimensions (W x D x H)	190 mm x 100 mm x 28 mm (7.48 in. x 3.94 in. x 1.1 in.)
	Weight	510 g (1.12 lbs) (without packaging materials)
	Shipping weight	1.34 kg (2.95 lbs)
Environment and Reliability	Mounting options	Wall/Desk
	Hot swapping of cables	Hot swapping supported by the service port and power connector
	Fan	Fanless design
	Cooling	Natural cooling
	MTBF	200,000 hours
	ESD protection	Air discharge: 8 kV Contact discharge: 6 kV
	Surge protection	Service port: ±4 kV for common mode

Parameter Type	**Parameter Name**	**RG-ES110D-P**
		Power connector: ±4 kV for common mode and ±2 kV for differential mode
	Operating temperature	0°C to 45°C (32°F to 113°F)
	Storage temperature	–40°C to +70°C (–40°F to +158°F)
	Operating humidity	10% RH to 90% RH (non-condensing)
	Storage humidity	5% RH to 95% RH (non-condensing)
	Altitude	Operating altitude: –500 m to +5,000 m (–1,640.42 ft. to +16,404.20 ft.) Storage altitude: –500 m to +5,000 m (–1,640.42 ft. to +16,404.20 ft.)
Certification and Regulatory Compliance	EMC	EN 55032 EN IEC 61000-3-2 EN 61000-3-3 EN 55035 EN 300 386
	Safety compliance	EN 62368-1 IEC 62368-1
	Certification	CE

Caution

Device operation in a residential environment may cause radio interference.

1.3.2 Product Appearance

The RG-ES110D-P provides eight 10/100Base-TX auto-sensing Ethernet ports, two 10/100/1000Base-T auto-sensing Ethernet ports, and LED indicators on the front panel, and a power socket, a port mode switchover button, and a grounding pole on the back panel.

Figure1-7 Appearance of the RG-ES110D-P



1. Front Panel

Figure1-8 Front Panel of the RG-ES110D-P

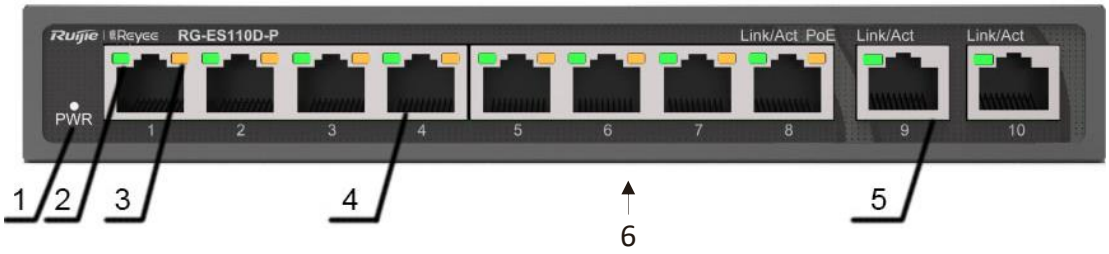

Note:	1. System status LED 2. Port status LED 3. PoE status LED 4. 10/100Base-TX PoE port 5. 10/100/1000Base-T auto-sensing Ethernet port 6. Nameplate on the bottom of the device

2. Back Panel

Figure1-9 Back Panel of the RG-ES110D-P

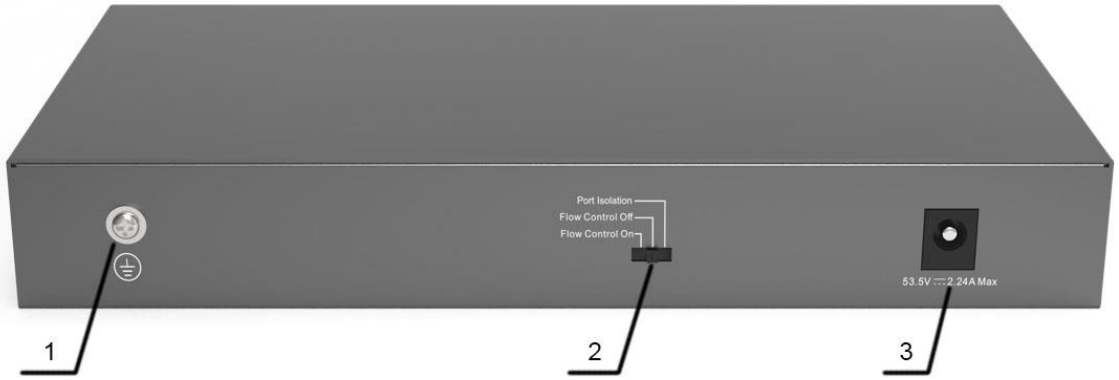

Note:	1. Grounding pole 2. Port mode switchover button 3. DC power socket

1.3.3 Heat Dissipation

The RG-ES110D-P adopts natural heat dissipation, thereby ensuring normal operation. You must maintain a minimum clearance of 100 mm (3.94 in.) around the RG-ES110D-P. It is recommended that you clean the RG-ES110D-P once every three months to avoid dust from blocking vents.

1.3.4 LEDs

LED	Panel Identification	State	Meaning
System status LED	PWR	Off	The switch is powered off.
		Solid green	The switch is operational.
RJ45 port status LED	Link/ACT (1–10)	Off	The port is not connected.
		Solid green	The port is connected at a rate of 10/100/1000 Mbps.
		Blinking green	The port is receiving or sending traffic at a rate of 10/100/1000 Mbps.
		Solid orange	A 10/100 Mbps link is established on the port.
		Blinking orange	The port is receiving and sending data at 10/100 Mbps.

RJ45 PoE status LED	PoE (1–8)	Off	PoE does not supply power.
		Solid green	PoE is operational.
		Blinking green	PoE is overloaded.

1.4 RG-ES118S-LP

1.4.1 Technical Specifications

Parameter Type	**Parameter Name**	**RG-ES118S-LP**
System Specifications	Forwarding rate	5.35 Mpps
	Switching capacity	7.2 Gbps(bit/s)
	Flash memory	1 MB
Port Specifications	Total number of optical ports	2
	Total number of RJ45 ports	18
	Number of 10/100BASE-T ports	16
	Number of 10/100/1000BASE-T ports	2
	Number of 1GE SFP ports	2
	Number of 1GE combo ports	2
	LEDs	1 x system status LED 16 x Ethernet port LEDs 16 x PoE power supply LEDs 2 x SFP port LED
	DIP switch	Switchover in three modes: 1. Flow Control On 2. Flow Control Off 3. Port Isolation

Parameter Type	**Parameter Name**	**RG-ES118S-LP**
Power Supply and Consumption	Power supply	Single fixed power supply
	Power input	220 V AC power supply: ● Rated input voltage: 100 V AC to 240 V AC, 50 Hz to 60 Hz ● Maximum input voltage: 90 V AC to 264 V AC, 47 Hz to 63 Hz ● Rated input current: 3 A
	Maximum power consumption	13 W (with no PoE load) 148 W (with PoE full load)
	Number of PoE Out ports	16
	Number of PoE/PoE+ Out ports	16
	PoE Out standard	PoE/PoE+ (IEEE 802.3af/at)
	PoE power pins	1–2 (+), 3–6 (-)
	PoE budget per port	30 W
	PoE budget	120 W
Dimensions and Weight	Product dimensions (W x D x H)	440 mm x 208 mm x 44 mm (17.32 in. x 8.19 in. x 1.73 in.)
	Weight	2.32 kg (5.11 lbs) (without packaging materials)
	Shipping weight	3.50 kg (7.72 lbs)
Environment and Reliability	Mounting options	Rack
	Hot swapping of cables	Hot swapping supported by the service port and power connector
	Fan	Fanless design
	Cooling	Natural cooling
	MTBF	200,000 hours
	ESD protection	Air discharge: 8 kV Contact discharge: 6 kV
	Surge protection	Service port: ±4 kV for common mode Power connector: ±6 kV for common mode and ±6 kV for differential mode

Parameter Type	**Parameter Name**	**RG-ES118S-LP**
	Operating temperature	0°C to 45°C (32°F to 113°F)
	Storage temperature	–40°C to +70°C (–40°F to +158°F)
	Operating humidity	10% RH to 90% RH (non-condensing)
	Storage humidity	5% RH to 95% RH (non-condensing)
	Altitude	Operating altitude: –500 m to +5,000 m (–1,640.42 ft. to +16,404.20 ft.) Storage altitude: –500 m to +5,000 m (–1,640.42 ft. to +16,404.20 ft.)
Certification and Regulatory Compliance	EMC	EN 55032 EN IEC 61000-3-2 EN 61000-3-3 EN 55035 EN 300 386
	Safety compliance	EN 62368-1 IEC 62368-1
	Certification	CE, CB

Caution

Device operation in a residential environment may cause radio interference.

1.4.2 Product Appearance

The RG-ES118S-LP provides sixteen 10/100Base-TX auto-sensing Ethernet ports, two 1000Base-X SFP combo ports, a port mode switchover button and LED indicators on the front panel, and a power socket and a grounding pole on the back panel.

Figure1-10 Appearance of the RG-ES118S-LP



1. Front Panel

Figure1-11 Front Panel of the RG-ES118S-LP

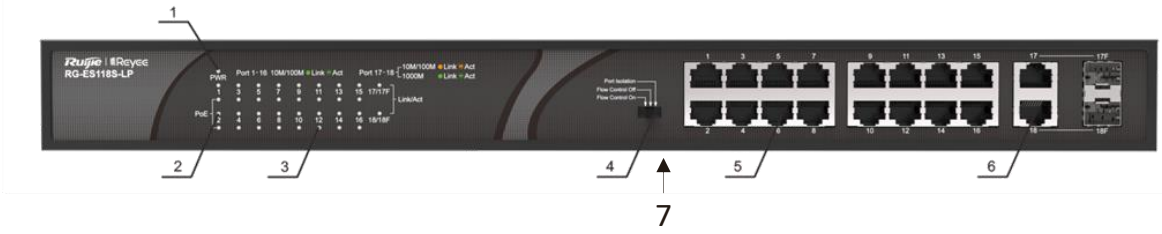

Note:	1. System status LED 2. Port status LED 3. PoE status LED	4. Port mode switchover button 5. 10/100Base-TX auto-sensing Ethernet port 6. 10/100/1000Base-T combo port 7. Nameplate on the bottom of the device

2. Back Panel

Figure1-12 Back Panel of the RG-ES118S-LP



Note:	1. Grounding pole 2. AC power socket

1.4.3 Heat Dissipation

The RG-ES118S-LP adopts fans for heat dissipation, thereby ensuring normal operation. You must reserve 10 cm distance space at both sides and the back plane of the cabinet to allow airflow. It is recommended that you clean the RG-ES118S-LP once every three months to avoid dust from blocking vents.

1.4.4 LEDs

LED	Panel Identification	State	Meaning
System status LED	PWR	Off	The switch is powered off.
		Solid green	The switch is operational.
RJ45 port status LED	Link/ACT (1–16)	Off	The port is not connected.
		Solid green	The port is connected at a rate of 10/100 Mbps.
		Blinking green	The port is receiving or sending traffic at a rate of 10/100 Mbps.
		Solid orange	A 10/100 Mbps link is established on the port.
		Blinking orange	The port is receiving and sending data at 10/100 Mbps.
Combo port LED	Link/ACT (17/17F, 18/18F)	Off	The port is not connected.
		Solid orange	The port is connected at a rate of 100 Mbps.
		Blinking orange	The port is receiving or sending traffic at a rate of 100 Mbps.
		Solid green	The port is connected at a rate of 1000 Mbps.
		Blinking green	The port is receiving or sending traffic at a rate of 1000 Mbps.
RJ45 PoE status LED	PoE (1–16)	Off	PoE does not supply power.
		Solid green	PoE is operational.

LED	Panel Identification	State	Meaning
		Blinking green	PoE is overloaded.

1.5 RG-ES116G

1.5.1 Technical Specifications

Parameter Type	Parameter Name	RG-ES116G
System Specifications	Forwarding rate	23.80 Mpps
	Switching capacity	32 Gbps(bit/s)
	Flash memory	1 MB
Port Specifications	Total number of RJ45 ports	16
	Number of 10/100/1000BASE-T ports	16
	LEDs	1 x system status LED 16 x Ethernet port LEDs
	DIP switch	Switchover in four modes: 1. Flow Control On 2. Flow Control Off 3. Port Isolation When port isolation is enabled, ports 1-14 are isolated from each other, but can communicate with ports 15 and 16. 4. Extend Data Transmission-10Mbps: When this mode is enabled, ports 1–8 have a reduced speed of 10 Mbps, with a transmission distance of up to 250 m (820.21 ft.). If compatibility is considered, some ports may not deliver such a transmission distance.
Power Supply and Consumption	Power supply	Single fixed power supply
	Power input	220 V AC power supply: ● Rated input voltage: 100 V AC to 240 V AC, 50 Hz to 60 Hz

Parameter Type	**Parameter Name**	**RG-ES116G**
		● Maximum input voltage: 90 V AC to 264 V AC, 47 Hz to 63 Hz ● Rated input current: 0.6 A
	Maximum power consumption	11 W
Dimensions and Weight	Product dimensions (W x D x H)	280 mm x 126 mm x 44 mm (11.02 in. x 4.96 in. x 1.73 in.)
	Weight	1.01 kg (2.23 lbs) (without packaging materials)
	Shipping weight	1.70 kg (3.75 lbs)
Environment and Reliability	Mounting options	Rack
	Hot swapping of cables	Hot swapping supported by the service port and power connector
	Fan	Fanless design
	Cooling	Natural cooling
	MTBF	200,000 hours
	ESD protection	Air discharge: 8 kV Contact discharge: 6 kV
	Surge protection	Service port: ±4 kV for common mode Power connector: ±6 kV for common mode and ±6 kV for differential mode
	Operating temperature	0°C to 45°C (32°F to 113°F)
	Storage temperature	–40°C to +70°C (–40°F to +158°F)
	Operating humidity	10% RH to 90% RH (non-condensing)
	Storage humidity	5% RH to 95% RH (non-condensing)
	Altitude	Operating altitude: –500 m to +5,000 m (–1,640.42 ft. to +16,404.20 ft.) Storage altitude: –500 m to +5,000 m (–1,640.42 ft. to +16,404.20 ft.)
Certification and Regulatory Compliance	EMC	EN 55032 EN IEC 61000-3-2 EN 61000-3-3 EN 55035

Parameter Type	Parameter Name	RG-ES116G
		EN 300 386
	Safety compliance	EN 62368-1 IEC 62368-1
	Certification	CE, CB

Caution

Device operation in a residential environment may cause radio interference.

1.5.2 Product Appearance

The RG-ES116G provides sixteen 10/100/1000Base-T auto-sensing Ethernet ports, a port mode switchover button and LED indicators on the front panel, and a power socket and a grounding pole on the back panel.

Figure1-13 Appearance of the RG-ES116G

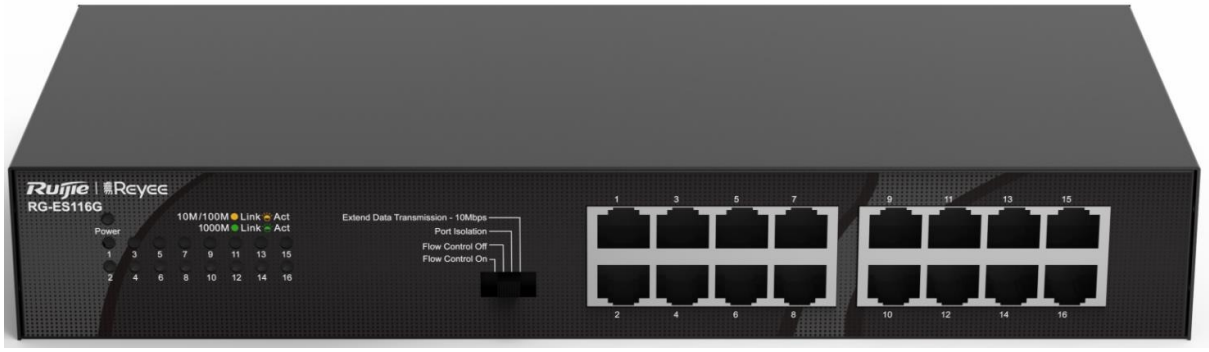

1. Front Panel

Figure1-14 Front Panel of the RG-ES116G

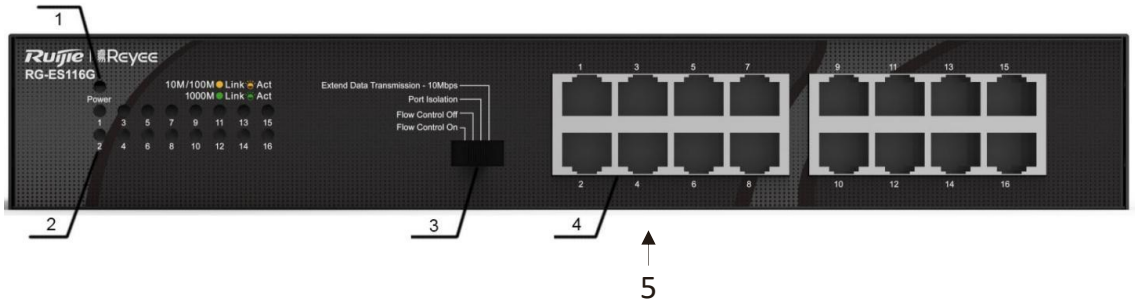

Note:	1. System status LED 2. Port status LED 3. Port mode switchover button 4. 10/100/1000Base-T auto-sensing Ethernet port 5. Nameplate on the bottom of the device

2. Back Panel

Figure1-15 Back Panel of the RG-ES116G

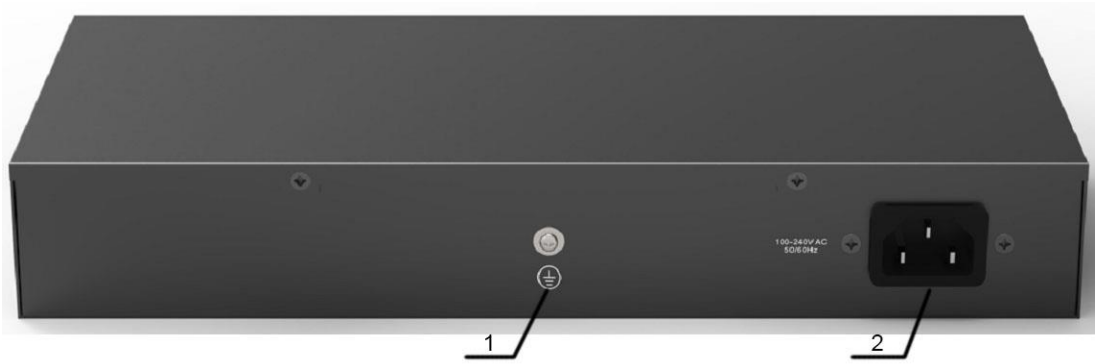

Note:	1. Grounding pole 2. AC power port

1.5.3 Heat Dissipation

The RG-ES116G adopts natural heat dissipation, thereby ensuring normal operation. You must maintain a minimum clearance of 100 mm (3.94 in.) around the RG-ES116G. It is recommended that you clean the RG-ES116G once every three months to avoid dust from blocking vents.

1.5.4 LEDs

LED	Panel Identification	State	Meaning
System status LED	Power	Off	The switch is powered off.
		Solid green	The switch is operational.
RJ45 port status LED	Link/ACT (1-16)	Off	The port is not connected.
		Solid orange	The port is connected at a rate of 10/100 Mbps.

LED	Panel Identification	State	Meaning
		Blinking orange	The port is receiving or sending traffic at a rate of 10/100 Mbps.
		Solid green	The port is connected at a rate of 1000 Mbps.
		Blinking green	The port is receiving or sending traffic at a rate of 1000 Mbps.

1.6 RG-ES124GD

1.6.1 Technical Specifications

Parameter Type	Parameter Name	RG-ES124GD
System Specifications	Forwarding rate	35.70 Mpps
	Switching capacity	48 Gbps(bit/s)
	Flash memory	1 MB
Port Specifications	Total number of RJ45 ports	24
	Number of 10/100/1000BASE-T ports	24
	LEDs	1 x system status LED 24 x Ethernet port LEDs
	DIP switch	Switchover in four modes: 1. Flow Control On 2. Flow Control Off 3. Port Isolation When port isolation is enabled, ports 1-22 are isolated from each other, but can communicate with ports 23 and 24. 4. Extend Data Transmission-10Mbps: When this mode is enabled, ports 1–8 have a reduced speed of 10 Mbps, with a transmission distance of up to 250 m

Parameter Type	**Parameter Name**	**RG-ES124GD**
		(820.21 ft.). If compatibility is considered, some ports may not deliver such a transmission distance.
Power Supply and Consumption	Power supply	Single fixed power supply
	Power input	220 V AC power supply: ● Rated input voltage: 100 V AC to 240 V AC, 50 Hz to 60 Hz ● Maximum input voltage: 90 V AC to 264 V AC, 47 Hz to 63 Hz ● Rated input current: 0.6 A
	Maximum power consumption	16 W
Dimensions and Weight	Product dimensions (W x D x H)	280 mm x 126 mm x 44 mm (11.02 in. x 4.96 in. x 1.73 in.)
	Weight	1.01 kg (2.23 lbs) (without packaging materials)
	Shipping weight	1.86 kg (4.1 lbs)
Environment and Reliability	Mounting options	Rack
	Hot swapping of cables	Hot swapping supported by the service port and power connector
	Fan	Fanless design
	Cooling	Natural cooling
	MTBF	200,000 hours
	ESD protection	Air discharge: 8 kV Contact discharge: 6 kV
	Surge protection	Service port: ±4 kV for common mode Power connector: ±6 kV for common mode and ±6 kV for differential mode
	Operating temperature	0°C to 45°C (32°F to 113°F)
	Storage temperature	–40°C to +70°C (–40°F to +158°F)
	Operating humidity	10% RH to 90% RH (non-condensing)
	Storage humidity	5% RH to 95% RH (non-condensing)

Parameter Type	**Parameter Name**	**RG-ES124GD**
	Altitude	Operating altitude: –500 m to +5,000 m (–1,640.42 ft. to +16,404.20 ft.) Storage altitude: –500 m to +5,000 m (–1,640.42 ft. to +16,404.20 ft.)
Certification and Regulatory Compliance	EMC	EN 55032 EN IEC 61000-3-2 EN 61000-3-3 EN 55035 EN 300 386
	Safety compliance	EN 62368-1 IEC 62368-1
	Certification	CE

Caution

Device operation in a residential environment may cause radio interference.

1.6.2 Product Appearance

The RG-ES124GD provides twenty-four 10/100/1000Base-T auto-sensing Ethernet ports, a port mode switchover button and LED indicators on the front panel, and a power socket and a grounding pole on the back panel.

Figure1-16 Appearance of the RG-ES124GD

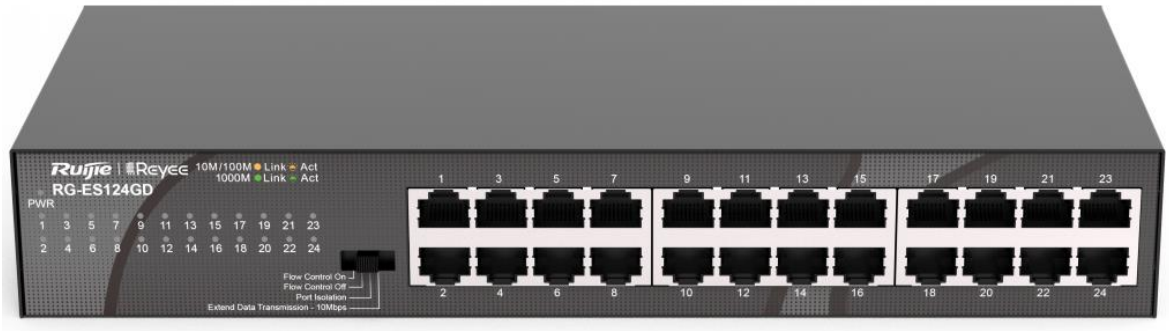

1. Front Panel

Figure1-17 Front Panel of the RG-ES124GD

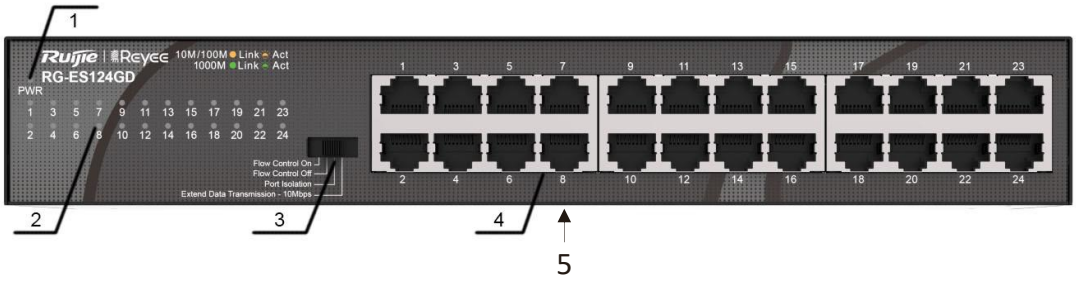

Note:	1. System status LED 2. Port status LED 3. Port mode switchover button 4. 10/100/1000Base-T auto-sensing Ethernet port 5. Nameplate on the bottom of the device

2. Back Panel

Figure1-18 Back Panel of the RG-ES124GD

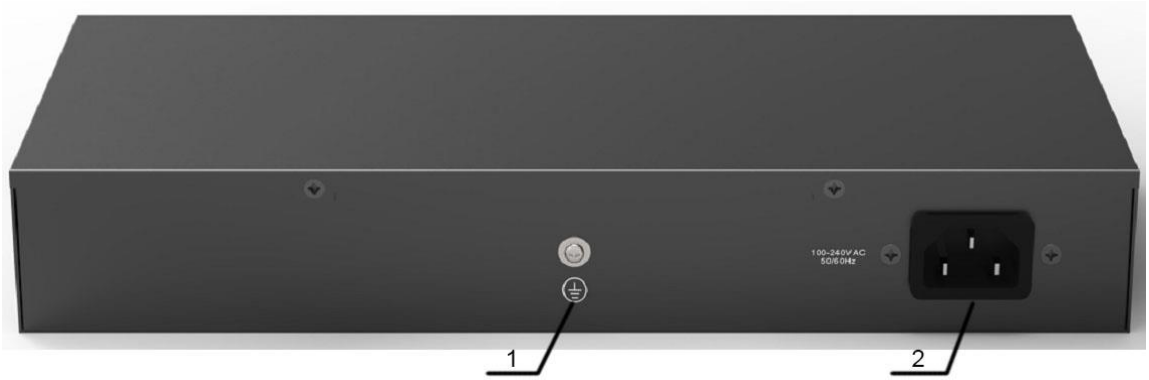

Note:	1. Grounding pole 2. AC power socket

1.6.3 Heat Dissipation

The RG-ES124GD adopts natural heat dissipation, thereby ensuring normal operation. You must maintain a minimum clearance of 100 mm (3.94 in.) around the RG-ES124GD. It is recommended that you clean the RG-ES124GD once every three months to avoid dust from blocking vents.

1.6.4 LEDs

LED	Panel Identification	State	Meaning
System status LED	Power	Off	The switch is powered off.
		Solid green	The switch is operational.
RJ45 port status LED	Link/ACT (1–24)	Off	The port is not connected.
		Solid orange	The port is connected at a rate of 10/100 Mbps.
		Blinking orange	The port is receiving or sending traffic at a rate of 10/100 Mbps.
		Solid green	The port is connected at a rate of 1000 Mbps.
		Blinking green	The port is receiving or sending traffic at a rate of 1000 Mbps.

1.7 RG-ES110GDS-P

1.7.1 Technical Specifications

Parameter Type	Parameter Name	RG-ES110GDS-P
System Specifications	Forwarding rate	14.80 Mpps
	Switching capacity	20 Gbps(bit/s)
	Flash memory	128 KB（E2PROM)
Port Specifications	Total number of optical ports	2
	Total number of RJ45 ports	8
	Number of 10/100/1000BASE-T ports	8
	Number of 1GE SFP ports	2
	LEDs	1 x system status LED

Parameter Type	**Parameter Name**	**RG-ES110GDS-P**
		10 x Ethernet port LEDs 8 x PoE power supply LEDs 2 x SFP port LED
	DIP switch	Switchover in three modes: 1. Flow Control On 2. Flow Control Off 3. Port Isolation
Power Supply and Consumption	Power supply	Single fixed power supply
	Power input	220 V AC power supply: ● Rated input voltage: 100 V AC to 240 V AC, 50 Hz to 60 Hz ● Maximum input voltage: 90 V AC to 264 V AC, 47 Hz to 63 Hz ● Rated input current: 3 A
	Maximum power consumption	22 W (with no PoE load) 142 W (with PoE full load)
	Number of PoE Out ports	8
	Number of PoE/PoE+ Out ports	8
	PoE Out standard	PoE/PoE+ (IEEE 802.3af/at)
	PoE power pins	1–2 (+), 3–6 (-)
	PoE budget per port	30 W
	PoE budget	120 W
Dimensions and Weight	Product dimensions (W x D x H)	280 mm x 180 mm x 44 mm (11.02 in. x 7.09 in. x 1.73 in.)
	Weight	1.46 kg (3.22 lbs) (without packaging materials)
	Shipping weight	2.30 kg (5.07 lbs)
Environment and Reliability	Mounting options	Wall/Desk
	Hot swapping of cables	Hot swapping supported by the service port and power connector
	Fan	Fanless design

Parameter Type	**Parameter Name**	**RG-ES110GDS-P**
	Cooling	Natural cooling
	MTBF	200,000 hours
	ESD protection	Air discharge: 8 kV Contact discharge: 6 kV
	Surge protection	Service port: ±4 kV for common mode Power connector: ±6 kV for common mode and ±6 kV for differential mode
	Operating temperature	0°C to 45°C (32°F to 113°F)
	Storage temperature	–40°C to +70°C (–40°F to +158°F)
	Operating humidity	10% RH to 90% RH (non-condensing)
	Storage humidity	5% RH to 95% RH (non-condensing)
	Altitude	Operating altitude: –500 m to +5,000 m (–1,640.42 ft. to +16,404.20 ft.) Storage altitude: –500 m to +5,000 m (–1,640.42 ft. to +16,404.20 ft.)
Certification and Regulatory Compliance	EMC	EN 55032 EN IEC 61000-3-2 EN 61000-3-3 EN 55035 EN 300 386
	Safety compliance	EN 62368-1 IEC 62368-1
	Certification	CE, CB

Caution

Device operation in a residential environment may cause radio interference.

1.7.2 Product Appearance

The RG-ES110GDS-P provides eight 10/100/1000Base-T auto-sensing Ethernet ports, two 1000BASE-X SFP port, a port mode switchover button and LED indicators on the front panel, and a power socket and a grounding pole on the back panel.

Figure1-19 Appearance of the RG-ES110GDS-P



1. Front Panel

Figure1-20 Front Panel of the RG-ES110GDS-P

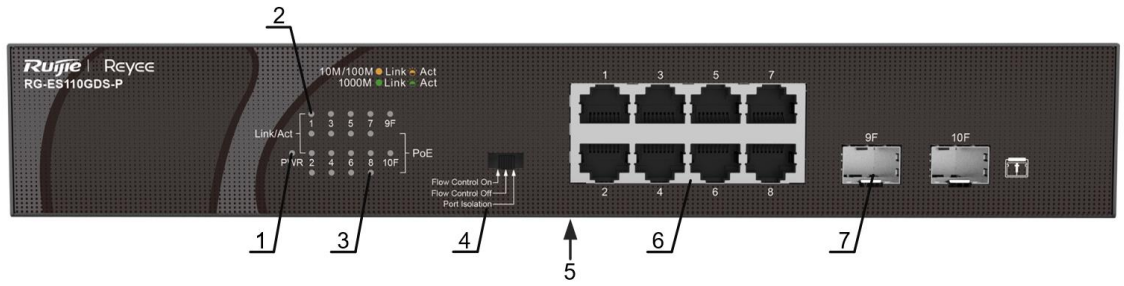

Note:	1. System status LED 2. Port status LED 3. PoE status LED 4. Port mode switchover button 5. Nameplate 6. 10/100/1000Base-T auto-sensing Ethernet port 7. 1000BASE-X SFP port

2. Back Panel

Figure1-21 Back Panel of the RG-ES110GDS-P

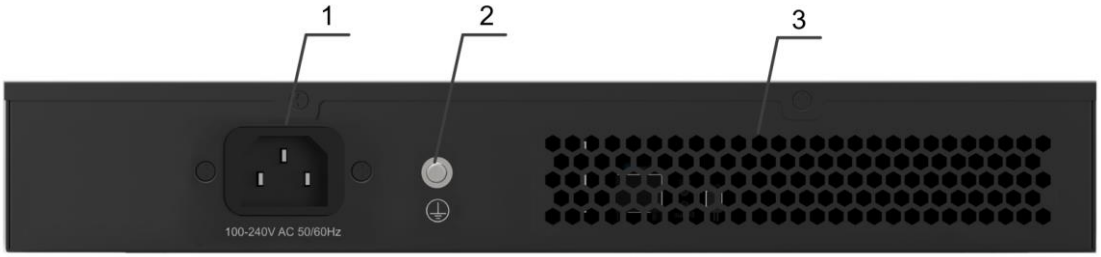

Note:	1. AC power socket 2. Grounding pole 3. Vents

1.7.3 Heat Dissipation

The RG-ES110GDS-P adopts natural heat dissipation, thereby ensuring normal operation. You must maintain a minimum clearance of 100 mm (3.94 in.) around the RG-ES110GDS-P. It is recommended that you clean the RG-ES110GDS-P once every three months to avoid dust from blocking vents.

1.7.4 LEDs

LED	Panel Identification	State	Meaning
System status LED	Power	Off	The switch is powered off.
		Solid green	The switch is operational.
RJ45 port status LED	Link/ACT (1–8)	Off	The port is not connected.
		Solid orange	The port is connected at a rate of 10/100 Mbps.
		Blinking orange	The port is receiving or sending traffic at a rate of 10/100 Mbps.
		Solid green	The port is connected at a rate of 1000 Mbps.
		Blinking green	The port is receiving or sending traffic at a rate of 1000 Mbps.
	Link/ACT (9–10)	Off	The port is not connected.

LED	Panel Identification	State	Meaning
Optical port status LED		Solid green	The port operates at 1000 Mbps and no data is transmitted.
		Blinking green	The port operates at 1000 Mbps and is transmitting data.
RJ45 PoE status LED	PoE (1–8)	Off	PoE does not supply power.
		Solid green	PoE is operational.
		Blinking green	PoE is overloaded.

1.8 RG-ES118GS-P

1.8.1 Technical Specifications

Parameter Type	Parameter Name	RG-ES118GS-P
System Specifications	Forwarding rate	26.80 Mpps
	Switching capacity	36 Gbps(bit/s)
	Flash memory	1 MB
Port Specifications	Total number of optical ports	2
	Total number of RJ45 ports	16
	Number of 10/100/1000BASE-T ports	16
	Number of 1GE SFP ports	2
	LEDs	1 x system status LED 16 x Ethernet port LEDs 16 x PoE power supply LEDs 2 x SFP port LED
	DIP switch	Switchover in three modes:

Parameter Type	**Parameter Name**	**RG-ES118GS-P**
		1. Flow Control On 2. Flow Control Off 3. Port Isolation When port isolation is enabled, ports 1-16 are isolated from each other, but can communicate with ports 17 and 18.
Power Supply and Consumption	Power supply	Single fixed power supply
	Power input	220 V AC power supply: ● Rated input voltage: 100 V AC to 240 V AC, 50 Hz to 60 Hz ● Maximum input voltage: 90 V AC to 264 V AC, 47 Hz to 63 Hz ● Rated input current: 3.5 A
	Maximum power consumption	50 W (with no PoE load) 297 W (with PoE full load)
	Number of PoE Out ports	16
	Number of PoE/PoE+ Out ports	16
	PoE Out standard	PoE/PoE+ (IEEE 802.3af/at)
	PoE power pins	1–2 (+), 3–6 (-)
	PoE budget per port	30 W
	PoE budget	247 W
Dimensions and Weight	Product dimensions (W x D x H)	440 mm x 240 mm x 44 mm (17.32 in. x 9.45 in. x 1.73 in.)
	Weight	3.08 kg (6.79 lbs) (without packaging materials)
	Shipping weight	4.20 kg (9.26 lbs)
Environment and Reliability	Mounting options	Rack
	Hot swapping of cables	Hot swapping supported by the service port and power connector
	Fan	2 x fixed fan
	Cooling	Air cooling, left-to-right airflow
	MTBF	200,000 hours

Parameter Type	**Parameter Name**	**RG-ES118GS-P**
	ESD protection	Air discharge: 8 kV Contact discharge: 6 kV
	Surge protection	Service port: ±4 kV for common mode Power connector: ±6 kV for common mode and ±6 kV for differential mode
	Operating temperature	0°C to 45°C (32°F to 113°F)
	Storage temperature	–40°C to +70°C (–40°F to +158°F)
	Operating humidity	10% RH to 90% RH (non-condensing)
	Storage humidity	5% RH to 95% RH (non-condensing)
	Altitude	Operating altitude: –500 m to +5,000 m (–1,640.42 ft. to +16,404.20 ft.) Storage altitude: –500 m to +5,000 m (–1,640.42 ft. to +16,404.20 ft.)
Certification and Regulatory Compliance	EMC	EN 55032 EN IEC 61000-3-2 EN 61000-3-3 EN 55035 EN 300 386
	Safety compliance	EN 62368-1 IEC 62368-1
	Certification	CE, CB

Caution

Device operation in a residential environment may cause radio interference.

1.8.2 Product Appearance

The RG-ES118GS-P provides sixteenn 10/100/1000Base-T auto-sensing Ethernet ports, two 1000BASE-X SFP port, a port mode switchover button and LED indicators on the front panel, and a power socket and a grounding pole on the back panel.

Figure1-22 Appearance of the RG-ES118GS-P



1. Front Panel

Figure1-23 Front Panel of the RG-ES118GS-P

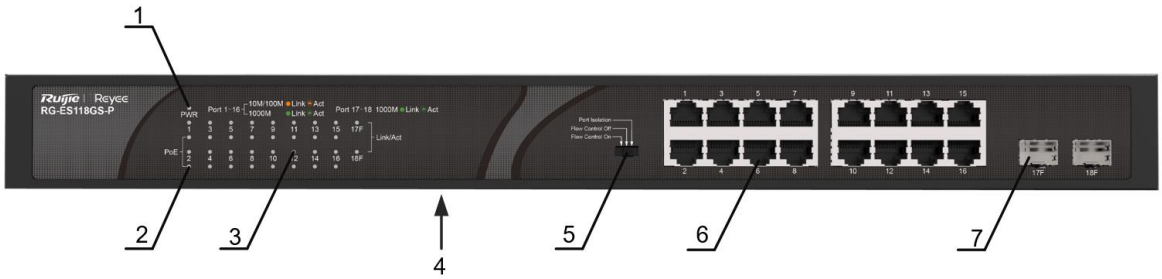

Note:	1. System status LED 2. PoE status LED 3. Port status LED 4. Nameplate 5. Port mode switchover button 6. 10/100/1000Base-T auto-sensing Ethernet port 7. 1000BASE-X SFP port

2. Back Panel

Figure1-24 Back Panel of the RG-ES118GS-P



Note:	1. Vents 2. Grounding pole 3. AC power socket

1.8.3 Heat Dissipation

The RG-ES118GS-P adopts fans for heat dissipation, thereby ensuring normal operation. You must reserve 10 cm distance space at both sides and the back plane of the cabinet to allow airflow. It is recommended that you clean the RG-ES126S-LP once every three months to avoid dust from blocking vents.

1.8.4 LEDs

LED	Panel Identification	State	Meaning
System status LED	Power	Off	The switch is powered off.
		Solid green	The switch is operational.
RJ45 port status LED	Link/ACT (1–16)	Off	The port is not connected.
		Solid orange	The port is connected at a rate of 10/100 Mbps.
		Blinking orange	The port is receiving or sending traffic at a rate of 10/100 Mbps.
		Solid green	The port is connected at a rate of 1000 Mbps.
		Blinking green	The port is receiving or sending traffic at a rate of 1000 Mbps.
Optical port status LED	Link/ACT (17–18)	Off	The port is not connected.
		Solid green	The port operates at 1000 Mbps and no data is transmitted.
		Blinking green	The port operates at 1000 Mbps and is transmitting data.
RJ45 PoE status LED	PoE (1–16)	Off	PoE does not supply power.
		Solid green	PoE is operational.
		Blinking green	PoE is overloaded.

2 Preparation Before Installation

2.1 Safety Suggestions

To avoid personal injury and device damage, carefully read the safety suggestions before you install the RG-ES100 series switch.

The following safety suggestions do not cover all possible dangers.

2.1.1 Installation

- Keep the chassis clean and free from any dust.
- Do not place the equipment in a walking area.
- Do not wear loose clothes or accessories that may be hooked or caught by the device during installation and maintenance.
- Turn off all power supplies and remove power sockets and cables before installing or uninstalling the device.

2.1.2 Movement

- Do not frequently move the device.
- When moving the device, note the balance and avoid hurting legs and feet or straining the back.
- Before moving the device, turn off all power supplies and dismantle all power modules.

2.1.3 Electricity

- Observe local regulations and specifications when performing electric operations. Relevant operators must be qualified.
- Before installing the device, carefully check any potential danger in the surroundings, such as ungrounded power supply, and damp or wet ground or floor.
- Before installing the device, find out the location of the emergency power supply switch in the room. First cut off the power supply in the case of an accident.
- Try to avoid maintaining the switch that is powered on alone.
- Be sure to make a careful check before you shut down the power supply.
- Do not place the device in a damp location. Do not let any liquid enter the chassis.

Note:

- Any nonstandard and inaccurate electric operation may cause an accident such as fire or electrical shock, thus causing severe even fatal damages to human bodies and the device.
- Direct or indirect touch through a wet object on high-voltage and mains supply may bring a fatal danger.
- If a power supply system is equipped with a leakage protector (leakage current switch or breaker), the rated leakage action current of each leakage protector is twice greater than the maximum leakage current of all the power supplies in the system. For example, if a system is equipped with twenty identical

power supplies, the leakage current of each power supply is equal to or less than 1.5 mA, and the total leakage current of the system is 30 mA. A leakage protector with 30 mA rated action current supports less than ten power supplies (that is, action current of the leakage protector/2/maximum leakage current of each power supply = 30/2/1.5 = 10). In other words, the leakage protector with 30 mA rated action current supports no more than ten power supplies. In this case, the twenty power supplies in the system require at least two leakage protectors with 30 mA rated action current and each leakage protector supports ten power supplies. If power supplies in a system differ in models, the rated leakage action current of each leakage protector divided by two is greater than the sum of maximum leakage current of all the power supplies. The rated leakage non-action current of a leakage protector must be 50% of the leakage action current. The leakage protector with 30 mA rated leakage action current is used as an example. The rated leakage non-action current must be 15 mA. When the leakage current falls below 15 mA, the protector should not act. Otherwise, misoperation may easily occur due to high sensitivity and thus the leakage protector trips, devices are powered off, and services are interrupted.

- To guarantee personal safety, the rated leakage action current of each leakage protector in the system must be equal to or less than 30 mA (human body safety current is 30 mA). When twice of the total leakage current of the system is greater than 30 mA, the system must be equipped with two or more leakage protectors.
- For details of the leakage current value of each power supply model, see Chapter 1 Product Overview.

2.1.4 Static Discharge Damage Prevention

To prevent damage from static electricity, pay attention to the following points:

- Proper grounding of grounding screws on the back panel of the device
- Indoor dust prevention
- Proper humidity conditions

2.1.5 Laser

The RG-ES126S-LP, RG-ES118S-LP, RG-ES110GDS-P, RG-ES118GS-P switch support multiple types of optical transceivers, all of which are Class I laser products. Pay attention to the following during the use of optical transceivers:

- When an optical transceiver is in operation, ensure that its port is connected to an optical fiber or covered by a dust cap to keep out dust and prevent it from burning your eyes.
- When an optical transceiver is in operation, do not look into its port after removing the optical fiber. Doing so may result in eye injury.

Do not approach or look directly into any optical port under any circumstances. This may cause permanent damage to your eyes.

2.2 Installation Site Requirements

The installation site must meet the following requirement to ensure normal working and a prolonged durable life of the switch.

2.2.1 Ventilation

You must maintain a minimum clearance of 100 mm (3.94 in.) around the device. After various cables have been connected, they should be arranged into bundles or placed on the cabling rack to avoid air inlet blocking. It is recommended that the device be cleaned at regular intervals. In particular, avoid dusts from blocking the screen mesh on the back of the cabinet.

2.2.2 Temperature and Humidity

To ensure the normal operation and prolong the service life of RG-ES100 series switch, keep proper temperature and humidity in the equipment room.

If the temperature and humidity in the equipment room do not meet requirements for a long period of time, the device may be damaged.

- In an environment with a high humidity, insulating materials may have bad insulation or even leaking electricity. Sometimes the materials may suffer from mechanical performance change and metallic parts may get rusted.
- In an environment with a low humidity, insulating strips may dry and shrink. Static electricity may occur easily and endanger circuits on the device.
- In an environment with a high temperature, the router is subject to more serious harm. Its performance may degrade significantly and various hardware faults may occur.

The ambient temperature and humidity of the RG-ES100 series switch must meet the requirements listed in Table 2-1.

Table2-1 Temperature and Humidity Requirements of the RG-ES100 Series Switch

Temperature	Relative Humidity
0°C to 45°C (32°F to 113°F)	10% to 90%

The requirements for the sampling site of the temperature and humidity in the operating environment of the device are as follows:

- There is no protective plate at the front or back of the rack.
- The vertical height is 1.5 m above the floor.
- The distance from the front panel of the device is 0.4 m.

2.2.3 Cleanness

Dust poses a severe threat to the running of the device. The indoor dust falling on the device may be absorbed by the static electricity, causing bad contact of the metallic joint. Such electrostatic absorption may occur more easily when the relative humidity is low. This affects the device lifecycle and causes communication faults. Table 2-2 lists the requirements for the dust content and granularity in the equipment room.

Table2-2 Requirements for the Dust Content and Granularity in the Equipment Room

Dust	Unit	Density

Diameter ≥ 0.5 μm	Particles/m^3	≤ 3.5 x 10^6
Diameter ≥ 5 μm	Particles/m^3	≤ 3 x 10^4

Apart from dust, the salt, acid, and sulfide in the air in the equipment room must also meet strict requirements. This is because such poisonous substances may accelerate the corrosion of the metal and the aging of some parts. The equipment room should be protected from the intrusion of harmful gases such as sulfur dioxide, sulfured hydrogen, nitrogen dioxide, and chlorine. Table 2-3 lists the requirements.

Table2-3 Requirements for Harmful Gases in the Equipment Room

Gas	Average (mg/m^3)	Maximum (mg/m^3)
SO_2	0.3	1.0
H_2S	0.1	0.5
NO_2	0.5	1.0
Cl_2	0.1	0.3

The average and maximum values are measured for a week. The switch cannot be placed in the environment with the maximum density for over 30 minutes every day.

2.2.4 Interference Resistance

The switch is vulnerable to external interface caused by capacity coupling, inductance coupling, electromagnetic wave radiation, common impedance (including grounding system) coupling, and conducting wires (including power cords, signal and output wires). Therefore, note the following points:

- The AC power supplying system is the TN system. The single-phase three-wire socket with protecting grounding must be used as the socket for the power supply to enable the device's upper filter circuit to effective filter the power interface.
- The switch should be far from high-power radio transmitting stations, radar stations and high-frequency and large-current devices.
- Electromagnetic shielding methods should be applied when necessary, such as using the shielded cable as the interface cable.
- Cables must be connected to interfaces inside the room to prevent damage to the device's signal ports caused by over-voltage and over-current generated by thunder and lightning.

2.2.5 Grounding

A good grounding system is the basis for stable and reliable operation of the device, preventing lightning strokes and resisting interference. Carefully check the grounding conditions at the installation site according to the grounding requirements, and perform grounding operations properly as required.

Effective grounding of the switch guarantees surge protection and interference resistance. Therefore, connect the grounding line of the switch properly.

The grounding cable is prepared by customers.

1. Safety Grounding

The device using AC power supply must be grounded by using the yellow/green safety grounding cable. Otherwise, when the insulating resistance decreases the power supply and the enclosure in the equipment, electric shock may occur.

The building must provide the protective grounding connection to ensure that the device is connected to the protection location.

The installation and maintenance personnel must check whether the A.C. socket is well connected to the protection location of the building. If not, use a protective grounding wire to connect the grounding end of the A.C. socket to the building's protection location.

The power supply socket must be installed in a place that is near to the device and where users can operate the device easily.

Before device installation, ensure that the ground is connected at first and disconnected finally.

The sectional area of the protective grounding wire should be at least 0.75 mm^2 (18 AWG).

Use the 3-core power supply line. The sectional area of each pin should be at least 0.75 mm^2 or 18 AWG.

2. Lightning Grounding

The surge protection system of a facility is an independent system that consists of the lightning rod, down conductor, and connector to the grounding system, which usually shares the power reference ground and ground cable. The lightning discharge ground is targeted for the facility.

3. EMC Grounding

The grounding required for EMC design includes the shielding ground, filter ground, noise and interference suppression, and level reference. All the above constitute the comprehensive grounding requirements. The resistance of earth wires should be less than 1 Ω. The RG-ES100 series switch back plane is reserved with one grounding pole, as shown in Figure 2-1.

Figure2-1 Grounding of the RG-ES100

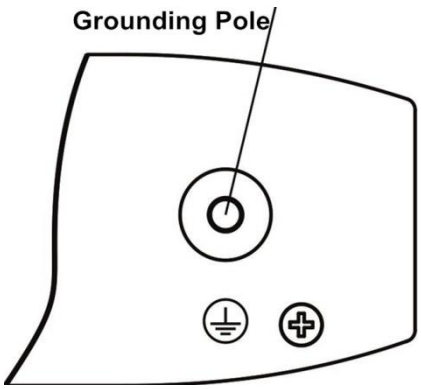

2.2.6 Lightning Resistance

When the AC power cable is imported outdoors and directly connected to the power port of the RG-ES100 series switch, use the lightning line bank to prevent the switch from being hit by lightning shocks. In this case, connect the mains supply AC cable to the lightning line bank, and connect the switch to the lightning line bank. This helps prevent the current of high-voltage lightning from passing the switch directly through the mains supply cable to a certain extent.

The lightning line banks are not provided and should be purchased by customers as required.

2.2.7 EMI

Electro-Magnetic Interference (EMI), from either outside or inside the device or application system, affects the system in the conductive ways such as capacitive coupling, inductive coupling, and electromagnetic radiation.

There are two types of electromagnetic interference: radiated interference and conducted interference, depending on the type of the transmission path.

When the energy, often RF energy, from a component arrives at a sensitive component through the space, the energy is known as radiated interference. The interference source can be either a part of the interfered system or a completely electrically isolated unit. Conducted interference results from an electromagnetic wire or signal cable connection between the source and the sensitive component, along which cable the interference conducts from one unit to another. Conducted interference often affects the power supply of the device, but can be controlled by a filter. Radiated interference may affect any signal path in the device and is difficult to shield.

- For the TN AC power supply system, the single-phase three-core power socket with protective earthing conductors (PE) should be adopted to effectively filter out interference from the power grid through filtering circuits.
- Do not use the grounding device for an electrical device or anti-lightning grounding device. In addition, the grounding device of the device must be deployed far away from the grounding device of the electrical device and anti-lightning grounding device.
- Keep the device away from the high-power radio transmitter, radar transmitting station, and high-frequency large-current device.
- Take measures to shield static electricity.
- Lay interface cables inside the equipment room. Outdoor cabling is prohibited, avoiding damages to device signal interfaces caused by over-voltage or over-current of lightning.

2.3 Installation Tools

Table2-4 Installation Tools

Common Tools	Phillips screwdriver, cables, bolts, diagonal pliers, and straps
Special Tools	Anti-static wrist strap
Meters	Multimeter

Note

The tool kit is customer-supplied.

3 Product Installation

3.1 Installation Flowchart

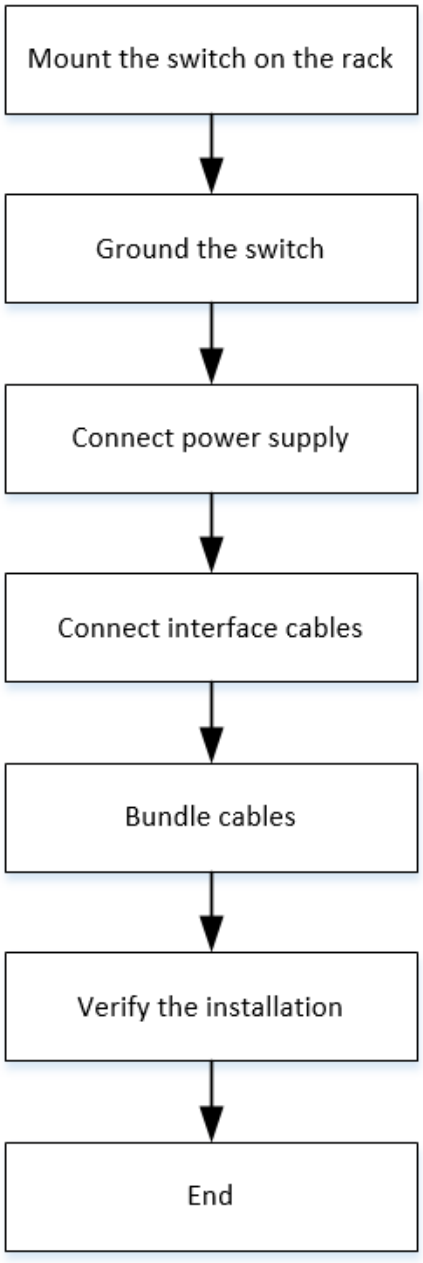

3.2 Precautions Before Installation

Before installation, confirm the following points:

- Check whether ventilation requirements are met for the switch.
- Check whether the requirements of temperature and humidity are met for the switch.

- Check whether power cables are already laid out and whether the requirements of electrical current are met.
- Check whether related network adaption lines are already laid out.

3.3 Installing the RG-ES100

During installation, note the following points:

- Connect the power cables of different colors to the corresponding grounding posts.
- Ensure that the interface of the power supply cable is properly connected to the power interface of the device. The power cables must be protected using power cable retention clips after they are connected to the device.
- Do not place any articles on the RG-ES100 series switch.
- Maintain a minimum clearance of 100 mm (3.94 in.) around the device. Do not stack the devices.
- The switch should be located at places free from the large power radio launch pad, radar launch pad, and high-frequency large-current devices. If necessary, use electromagnetic shielding. For example, use interface cables to shield cables.
- 100-meter network cables should be laid inside the equipment room and outdoor cabling of such cables is prohibited. If outdoor cabling is necessary, take relevant measures for surge protection.

3.3.1 Mounting the Switch in a Standard 19-inch Rack

The RG-ES106D-P and RG-ES110D-P series switches do not support rack mounting.

The RG-ES126S-LP, RG-ES118S-LP, RG-ES116G, and RG-ES124GD series switches follow the EIA standard dimensions and can be installed in a 19-inch rack.

Step 1: Attach the mounting brackets to the switch with the supplied screws, as shown in Figure 3-1.

Figure3-1 Attaching the Mounting Bracket to RG-ES126S-LP or RG-ES118S-LP

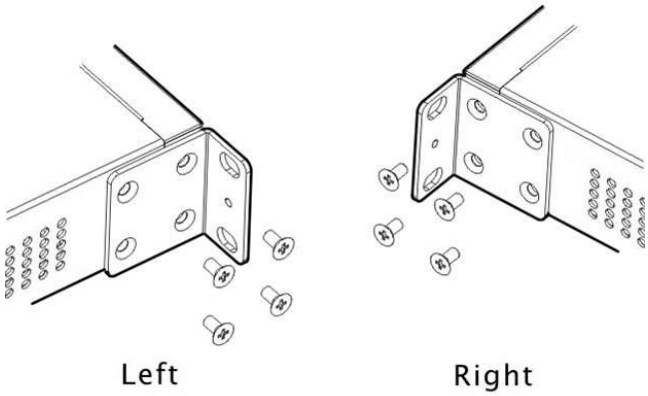

Figure3-2 Attaching the Mounting Bracket to RG-ES116G or RG-ES124GD

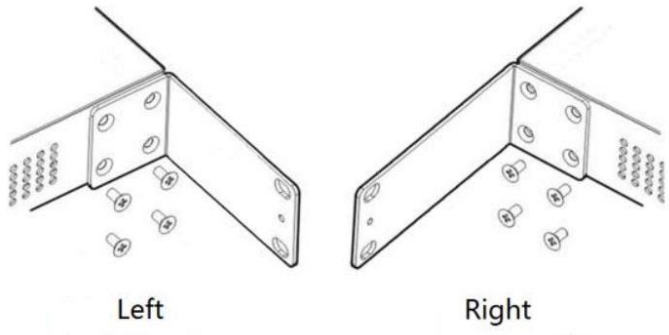

Step 2: Use the supplied screws and cage nuts to securely attach the mounting brackets to the rack, as shown in Figure 3-3.

Figure3-3 Attaching the Brackets to the Rack

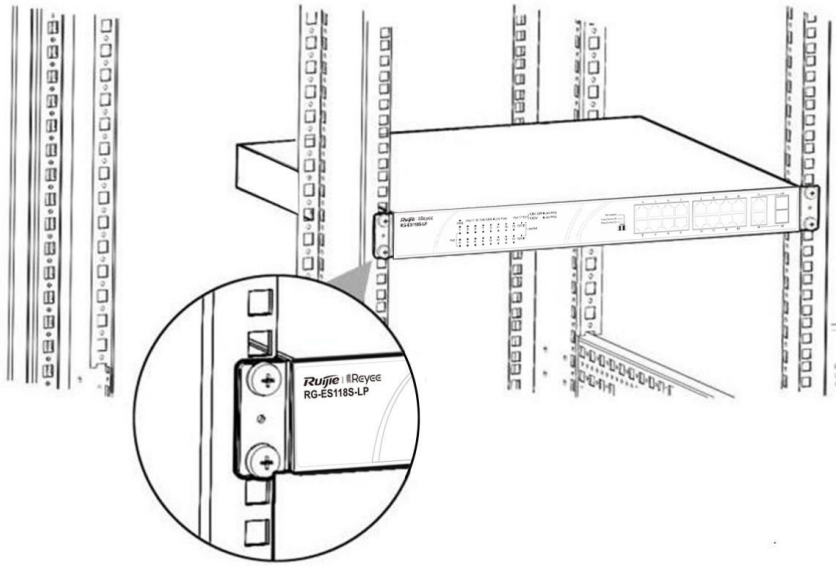

(1)

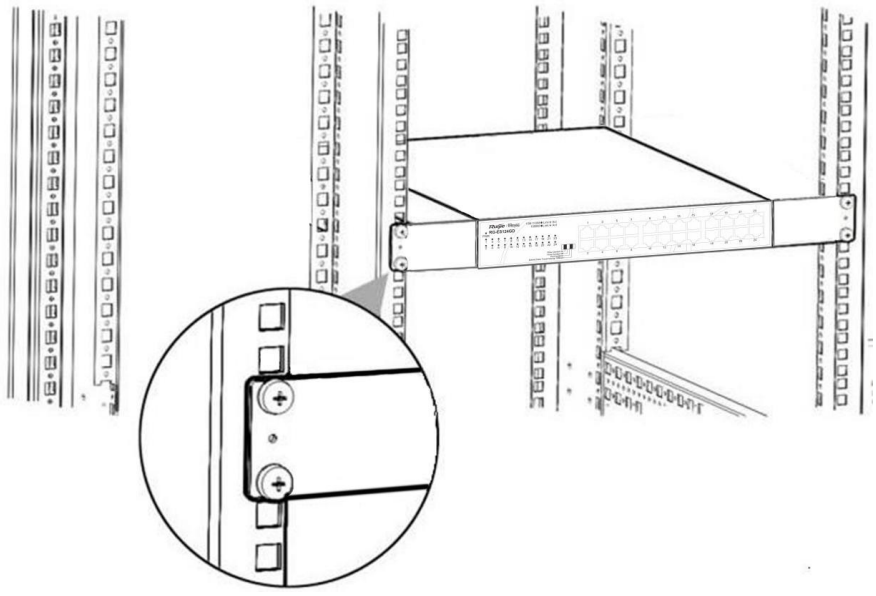

(2)

3.3.2 Mounting the Switch Against a Wall

The RG-ES106D-P and RG-ES110D-P can be mounted against the wall. Mounting screws and wall anchors are customer supplied.

You need to determine the size and depth of the two mounting holes on the wall based on the sizes of wall anchors and screws. Ensure that the wall anchors can be inserted into the holes. The outer edges of the wall anchors are left outside the wall, so screws can be tightly fastened to the wall.

The RG-ES110D-P is used as an example. The steps of mounting the switch against the wall are as follows:

Step 1: As shown in Figure 3-1, drill two holes 97.6 mm (3.84 in.) far away from each other. The line of connecting the two holes is horizontal.

Step 2: Insert wall anchors into the holes and ensure that the outer edges of the wall anchors are aligned with the wall.

Step 3: Put screws (ST4.2x20 recommended) into the wall anchors. Ensure that the distance between the inner side of the screw head and the outer edge of the wall anchors not be smaller than 2.5 mm (0.10 in.) so that the device can be securely mounted on the screws.

Step 4: Align the two mounting holes on the bottom of the chassis of the device with the screws, and then fasten the device on the screws.

Figure3-4 Mounting the Switch Against the Wall

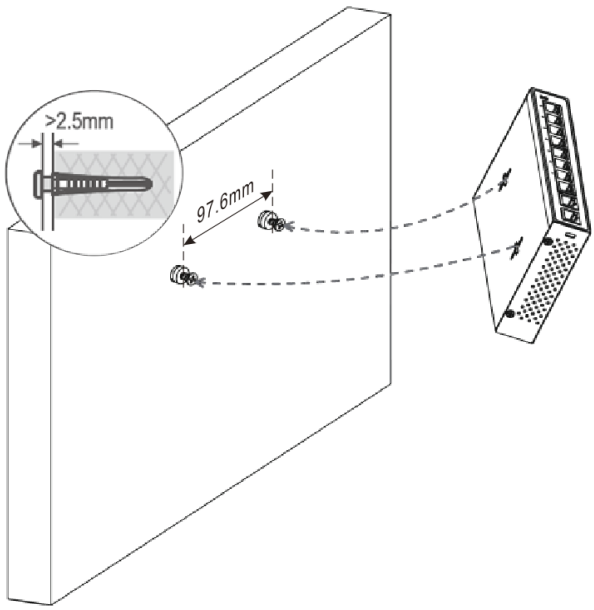

Note:

It is suitable for mounting on the concrete or non-combustible surface only.

3.3.3 Mounting the Switch on a Table

The RG-ES110D-P is used as an example. Place the switch on a table, as shown in Figure 3-2.

Figure3-5 Placing the Switch on a Table

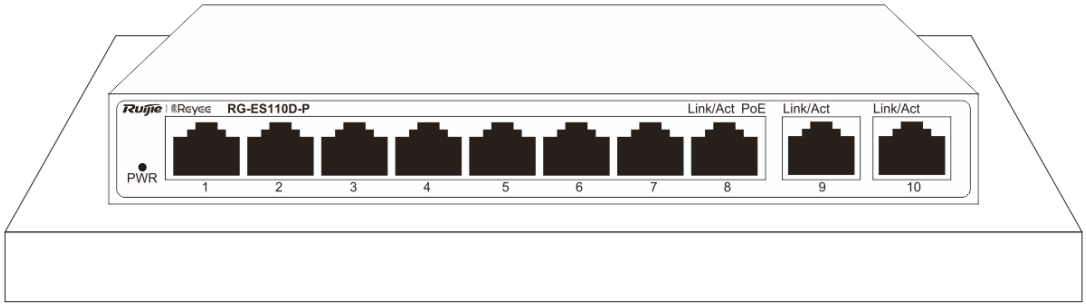

Note:

The device must be installed and operated in the place that can restrict its movement.

3.4 Checking After Installation

Before checking the installation, switch off the power supply so as to avoid any personal injury or damage to the component due to connection errors.

- Check that the ground line is connected.
- Check that the cables and power input cables are correctly connected.
- Check that all interface cables are laid out inside the equipment room. In the case of external cabling, check that the lightning resistance socket or network interface lightning protector is connected.
- Maintain a minimum clearance of 100 mm (3.94 in.) around the device.

3.5 Adding an Unmanaged Device to the Topology

Note:

Devices including Reyee EG or ES2/NBS switches can be managed in the network.

Scenarios:

- To add an unmanaged switch, select its uplink device, and scan the QR Code on the switch or manually add it to the topology.
- If the unmanaged switch is added to the topology and displayed as a virtual device: Select the virtual device, and scan its QR code or manually enter its information to the topology.

3.5.1 Scanning the QR Code of the Unmanaged Device

1. Tap **Topology** to open the topology page.

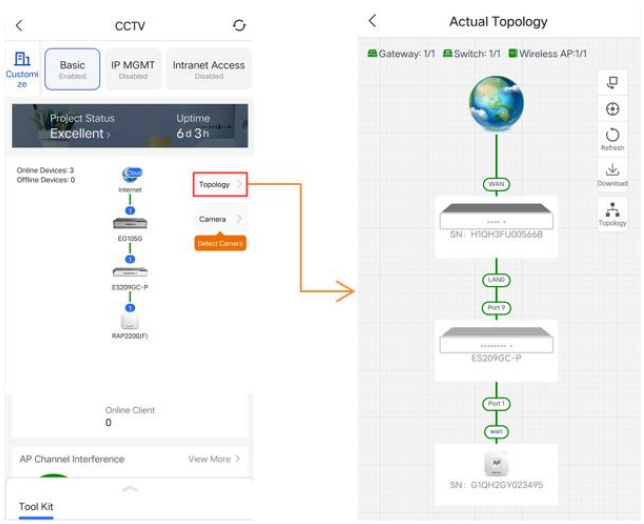

2. Tap the **Topology** button, and select the existing managed device. To add an unmanaged downlink switch by scanning its QR code, select **Scan to Add**.

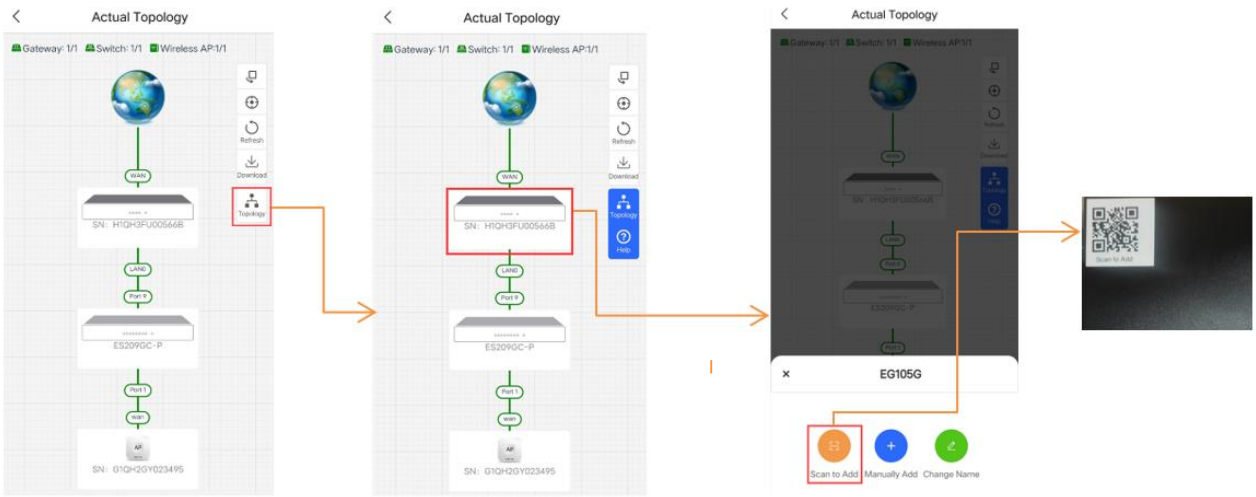

3. After the device is detected, select its uplink port. The device is added successfully.

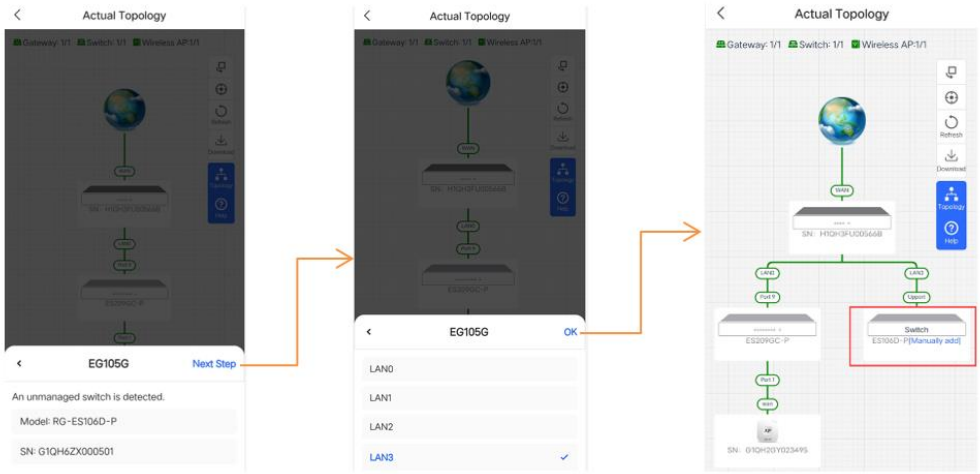

3.5.2 Adding an Unmanaged Device Manually

1. Tap **Topology** to access the topology page.

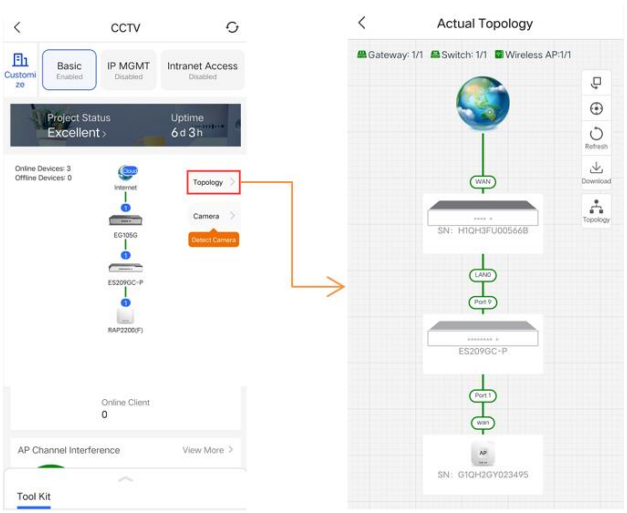

2. Tap the **Topology** button, and select the existing managed device. To add an unmanaged downstream switch manually, select **Manually Add**.

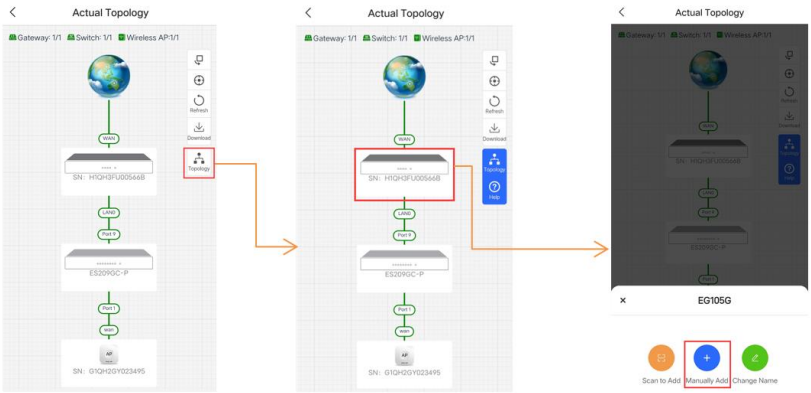

3. Select the device model and its uplink port. The device is added successfully.

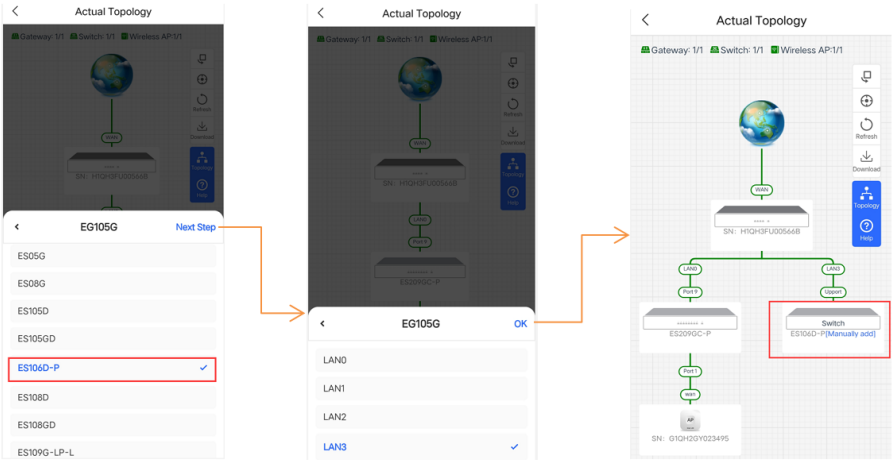

4 System Commissioning

4.1 Startup Check

4.1.1 Checking Before the Device Is Powered On

- The switch is well grounded.
- The power cable is correctly connected.
- The power supply voltage complies with the requirement of the switch.

4.1.2 Checking After Program Startup (Recommended)

After power-on, you are advised to perform the following checks to ensure the normal operation of follow-up configurations.

- Check whether the status of the switch indicator is normal.
- Check whether the service interface forwards data normally.

5 Maintenance and Troubleshooting

5.1 Troubleshooting Procedure

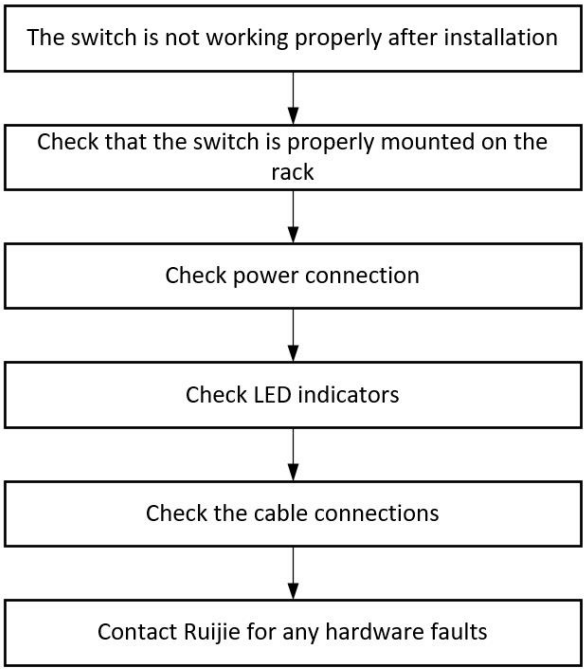

5.2 Troubleshooting Common Faults

Symptom	Possible Causes	Solution
The status indicator is not on after the switch is started.	The power module does not work. The power cable is in loose contact.	Check whether the power socket in the equipment room is normal and whether the power cable is installed.
The RJ45 port is not connected or an error occurs when the port is receiving or transmitting frames.	The connected twisted pair cable is faulty. The length of the cable exceeds 100 m. The port has special configuration, which does not adapt to the working mode of the connected switch.	Replace the twisted pair cable. Check that the working mode of the port must adapt to that of the connected switch.

Symptom	Possible Causes	Solution
The fiber port cannot be connected.	The Rx and Tx ends are connected reversely. The interconnected optical module type does not match. The fiber type is incorrect. The length of the optical fiber exceeds that rated of the optical module.	Switch the Rx and Tx ends of the optical fiber. Replace the optical module with one of the matched type. Replace the optical fiber with one of the appropriate type. Replace the optical fiber with one of the appropriate length.

6 Appendix

6.1 Connectors and Media

6.1.1 10/100/1000BASE-T Port

The 10/100/1000BASE-T port supports auto-negotiation for 10 Mbps, 100 Mbps, and 1000 Mbps connections and also supports auto MDI/MDIX Crossover.

Compliant with IEEE 802.3ab, a 1000BASE-T port connects to a 100-ohm Category 5 (CAT5) or Category 5 Enhanced (CAT5e) Unshielded Twisted Pair (UTP), or recommended Shielded Twisted Pair (STP) cable with a maximum distance of 100 m (328.08 ft.).

The 1000BASE-T port requires that all four pairs of wires be connected for data transmission. Figure6-1 shows twisted pair connections for the 1000BASE-T port.

Figure6-1 Twisted Pair Connections for a 1000BASE-T Port

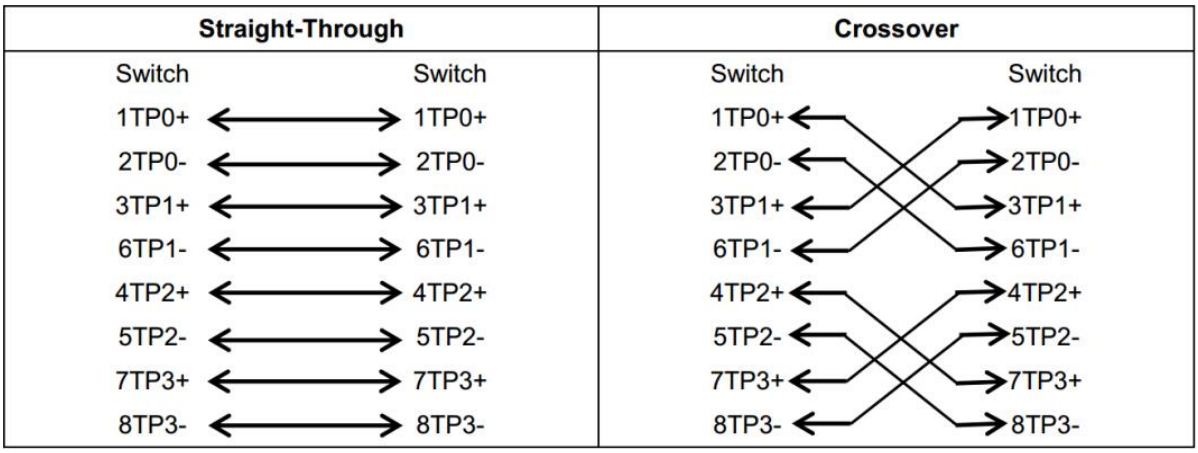

In addition to cables with the above-mentioned specifications, the 10/100BASE-T port can also be connected using 100-ohm CAT3, CAT4, and CAT5 cables at 10 Mbps or using 100-ohm CAT5 cables with a maximum distance of 100 m (328.08 ft.). The following table shows pin assignments for a 10/100BASE-T port.

Table6-1 10/100BASE-T Pin Assignment

Pin	Socket	Plug
1	Input Receive Data+	Output Transmit Data+
2	Input Receive Data-	Output Transmit Data-
3	Output Transmit Data+	Input Receive Data+
6	Output Transmit Data-	Input Receive Data-
4, 5, 7, and 8	Not Used	Not Used

The following table shows wiring of straight-through and crossover cables for a 10/100BASE-T port.

Figure6-2 Twisted Pair Connections for a 10/100BASE-T Port

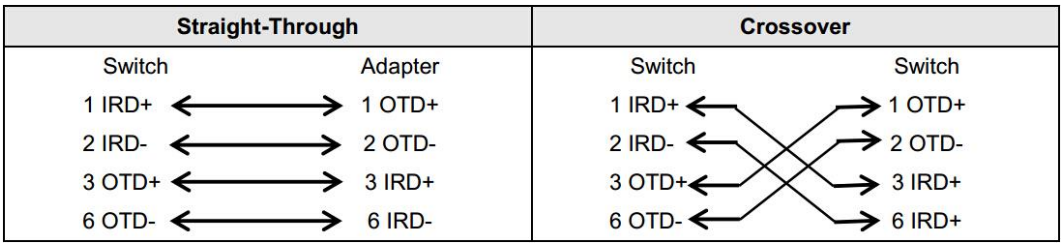

6.1.2 Optical Cable Connection

Select a single-mode fiber (SMF) or multimode fiber (MMF) for connections based on the type of the optical transceiver inserted into an optical port. Figure6-3 shows the connections.

Figure6-3 Connecting the Optical Cables

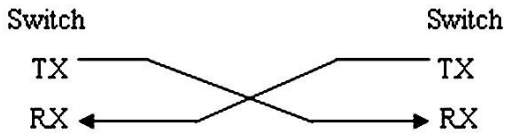

6.2 SFP Transceivers

Ruijie provides SFP transceivers (mini-GBIC) based on the port types. You can select one that suits your specific needs. In addition to the following 1GE SFP transceivers, the 1GE copper transceiver Mini-GBIC-GT is also supported. This document provides models and technical specifications of some 1GE SFP transceivers for reference. For details about the technical specifications, see *Ruijie Transceiver Installation and Reference Guide*.

Table6-2 1GE Mini-GBIC (SFP) Models and Technical Specifications

Model	Wavelength (nm)	Fiber Type	DDM Supported (Yes/No)	Transmit Power (dBm)		Receive Power (dBm)	
				Min	**Max**	**Min**	**Max**
MINI-GBIC-SX-MM850	850	MMF	Yes	–9	–3	–20	–3
MINI-GBIC-LX-SM1310	1310	SMF	Yes	–9	–3	–26	0
GE-SFP-LH40-SM1310-BIDI	1310TX/1550RX	SMF	Yes	–3	3	–25	0
GE-SFP-LH40-SM1550-BIDI	1550TX/1310RX	SMF	Yes	–3	3	–25	0

GE-SFP-LX20-SM1310-BIDI	1310TX/1550RX	SMF	Yes	–8	–3	–23	–3
GE-SFP-LX20-SM1550-BIDI	1550TX/1310RX	SMF	Yes	–8	–3	–23	–3
MINI-GBIC-LH40-SM1310	1310	SMF	Yes	–5	0	–25	–3
MINI-GBIC-ZX80-SM1550	1550	SMF	Yes	–3	3	–26	–3
GE-SFP-LX03-SM1310-BIDI-I	1310TX/1550RX	SMF	Yes	–9	–3	–22	–3
GE-SFP-LX03-SM1550-BIDI-I	1550TX/1310RX	SMF	Yes	–9	–3	–22	–3
SFP-MM850	850	MMF	Yes	–9.5	–3	–17	–3
SFP-SM1310	1310	SMF	Yes	–9	–3	–20	–3

Table6-3 1GE SFP Copper Transceivers

Standard	1000BASE-T SFP Module	DDM Supported (Yes/No)
1000BASE-T	Mini-GBIC-GT	No

Table6-4 Cabling Specifications of SFP Transceivers

SFP Transceiver Model	Port Type	Fiber Type	Core Size (μm)	Max Cabling Distance
SFP-SM1310	LC	SMF	9/125	10 km (6.21 miles)
MINI-GBIC-LX-SM1310	LC	SMF	9/125	10 km (6.21 miles)
GE-SFP-LH40-SM1310-BIDI	LC	SMF	9/125	40 km (24.85 miles)
GE-SFP-LH40-SM1550-BIDI	LC	SMF	9/125	40 km (24.85 miles)
GE-SFP-LX20-SM1310-BIDI	LC	SMF	9/125	20 km (12.43 miles)
GE-SFP-LX20-SM1550-BIDI	LC	SMF	9/125	20 km (12.43 miles)
MINI-GBIC-LH40-SM1310	LC	SMF	9/125	40 km (24.85

SFP Transceiver Model	Port Type	Fiber Type	Core Size (μm)	Max Cabling Distance
				miles)
MINI-GBIC-ZX80-SM1550	LC	SMF	9/125	80 km (49.71 miles)
GE-SFP-LX03-SM1310-BIDI-I	LC	SMF	9/125	3 km (1.86 miles)
GE-SFP-LX03-SM1550-BIDI-I	LC	SMF	9/125	3 km (1.86 miles)
MINI-GBIC-SX-MM850	LC	MMF	62.5/125	275 m (902.23 ft.)
			50/125	550 m (1,804.46 ft.)
SFP-MM850	LC	MMF	62.5/125	275 m (902.23 ft.)
			50/125	550 m (1,804.46 ft.)
Mini-GBIC-GT	RJ45 Ethernet cable	CAT5 or better UTP or STP cable		100 m (328.08 ft.)

Caution

- For optical transceivers with a cabling distance of no less than 40 km (24.85 miles), install an optical attenuator to avoid overload on an optical receiver when using short-distance SMFs.
- An optical transceiver is a laser transmitter. Do not look into the light source to prevent it from burning your eyes.
- To keep the optical transceiver clean, make sure that the unused ports remain capped.

Table6-5 BIDI Optical Transceiver Pairing

Rate/Distance	Pairing Model
1000 Mbps/3 km (1.86 miles)	● GE-SFP-LX03-SM1310-BIDI-I ● GE-SFP-LX03-SM1550-BIDI-I
1000 Mbps/20 km (12.43 miles)	● GE-SFP-LX20-SM1310-BIDI ● GE-SFP-LX20-SM1550-BIDI
1000 Mbps/40 km (24.85 miles)	● GE-SFP-LH40-SM1310-BIDI ● GE-SFP-LH40-SM1550-BIDI

Caution

BIDI optical transceivers must be used in pairs. For example, if GE-SFP-LX20-SM1310-BIDI is used at one end, GE-SFP-LX20-SM1550-BIDI must be used at the other end.

6.3 Lightning Protection

6.3.1 Installing the AC Power Arrester (Power Strip with Surge Protection)

When an alternating current (AC) power cord is introduced from outdoors and directly connected to the AC power port of the switch, the power port must be connected to an external power arrester to safeguard the switch against lightning strikes. The power arrester can be fixed on the rack, workbench, or wall in the equipment room by using cable ties and screws. AC power enters the power arrester before entering the switch.

Figure6-4 Power Arrester

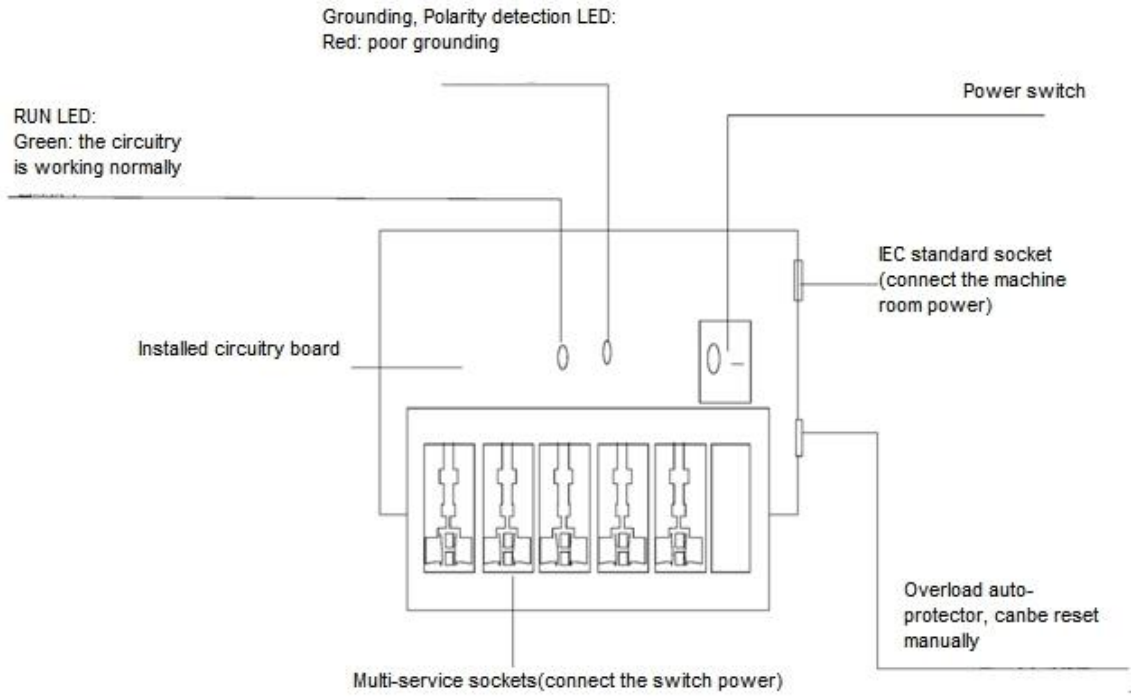

Caution

The power arrester is not delivered with the equipment. Please purchase it based on actual requirements.

Precautions during the installation:

- Make sure that the PE terminal of the power arrester is well grounded.
- After the AC power plug of the switch is connected to the socket of the power arrester, the lightning protection function is implemented only if the running status LED is green and the alarm LED is off.
- If the alarm LED on the power arrester is red, check whether it is caused by a poor grounding connection or by the reversed connection of the neutral and live wires. The detection method is as follows: Use a multimeter

to measure the polarity of the power arrester when the alarm LED is red. If the neutral wire is on the left and the live wire is on the right (facing the socket), the PE terminal of the power arrester is not grounded. If not, the polarity of the power arrester should be reversed. In this case, open the power arrester and reverse its polarity. If the alarm LED is still red, the PE terminal of the power arrester is not grounded.

6.3.2 Installing the Ethernet Port Arrester

Please connect an Ethernet port arrester to the switch to prevent the damage by lightning strikes before connecting an outdoor Ethernet cable to the switch.

- Tools: Phillips screwdriver or flat-blade screwdriver, multimeter, and diagonal pliers
- Installation steps

a. Tear one side of the protective paper for the double-sided adhesive tape and paste the tape to the enclosure of the Ethernet port arrester. Tear the other side of the protective paper for the double-sided adhesive tape and paste the Ethernet port arrester to the switch enclosure. The paste position for the Ethernet port arrester should be as close to the grounding lug of the switch as possible.

b. Based on the distance between the grounding lug of the switch and the Ethernet port arrester, cut the grounding cable of the Ethernet port arrester and firmly tighten the grounding cable to the grounding lug of the switch.

c. Use a multimeter to check whether the grounding cable for the arrester is in good contact with the grounding lug and the enclosure of the switch.

d. Connect the Ethernet port arrester by using an adapter cable (note that the external Ethernet cable is connected to the IN end, while the adapter cable connected to the switch is connected to the OUT end) and check whether the module LED is normal.

e. Use a nylon cable tie to bind the cables.

Figure6-5 Installing an Ethernet Port Arrester

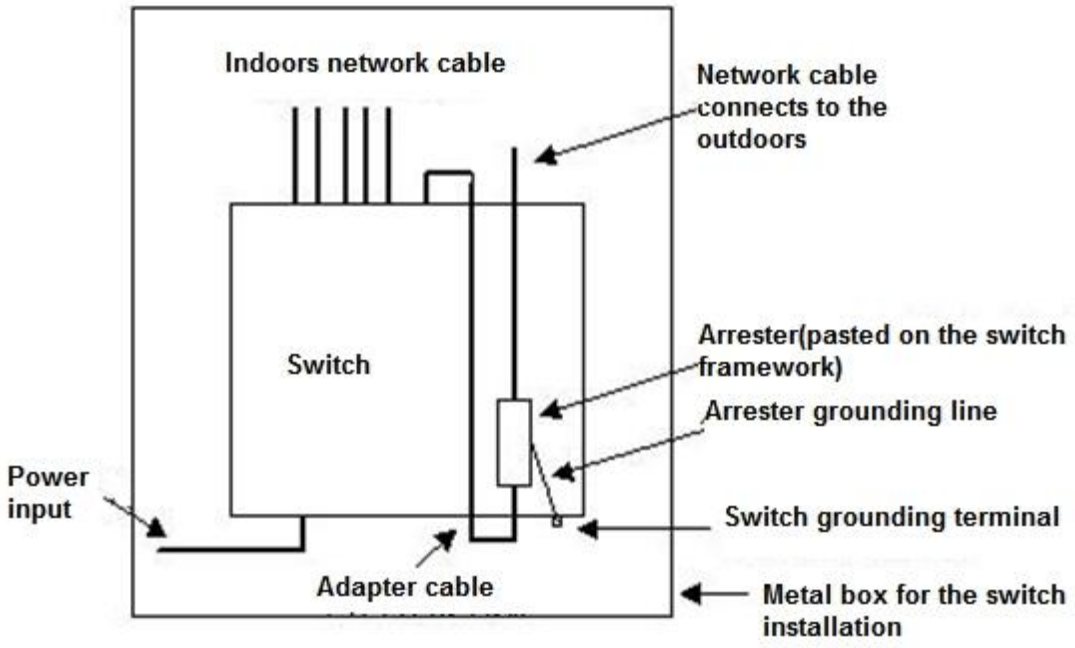

Caution

- The Ethernet port arrester is only for a 10 Mbps, 100 Mbps, or 1000 Mbps RJ45 port.
- The Ethernet port arrester is not delivered with the equipment. Please purchase it based on actual requirements. The user manual for Ethernet port arresters contains technical parameters and maintenance and installation instructions. Carefully read this manual during installation.

Pay attention to the following situations during the actual installation to avoid influencing the performance of an Ethernet port arrester:

- The arrester is incorrectly connected to the cables. Connect the external Ethernet cable to the IN end and connect the Ethernet port of the switch to the OUT end.
- The Ethernet port arrester is incorrectly grounded. The grounding cable of the arrester should be as short as possible to ensure that it is in good contact with the grounding lug of the switch. Use a multimeter to confirm the contact condition after grounding.
- Not all Ethernet ports are installed with Ethernet port arresters. If outdoor Ethernet cables connect the switch ports to the peer equipment, Ethernet port arresters need to be installed on all the ports for the purpose of lightning protection.

6.4 Recommended Cabling

When the switch is installed in a standard 19-inch cabinet, secure the cables around the cable management brackets. Top cabling or bottom cabling is adopted according to the actual situation in the equipment room. All adapted connectors should be placed at the bottom of the rack in an orderly manner instead of outside the rack that is easy to touch. Power cords are routed beside the rack. Top cabling or bottom cabling is adopted according to the actual situation in the equipment room, such as the positions of the DC power distribution box, AC socket, or lightning protection box.

6.4.1 Requirement for the Minimum Bend Radius of Cables

- The bend radius of a fixed power cord, Ethernet cable, and flat cable should be over five times greater than their respective external diameters. The bend radius of these cables that are often bent or plugged should be over seven times greater than their respective external diameters.
- The bend radius of a fixed common coaxial cable should be over seven times greater than its external diameter. The bend radius of these cables that are often bent or plugged should be over 10 times greater than their respective external diameters.
- The minimum bend radius of a high-speed cable, such as an SFP+ cable, should be 5 times the overall diameter of the cable. If the cable is constantly bent, plugged or unplugged, the bend radius should be 10 times the overall diameter.
- The minimum bend radius of optical cables should meet the following requirements.
  - The diameter of the optical cable tray should be no less than 25 times greater than that of the optical cable.
  - When an optical cable is moved, its bend radius should be no less than 20 times greater than its diameter.
  - During cabling of an optical cable, its bend radius should be no less than 10 times greater than its

diameter.

6.4.2 Precautions for Cable Bundling

- Before cables are bundled, mark labels and stick the labels to cables wherever appropriate.
- Cables should be neatly and properly bundled in the rack without twisting or bending, as shown in Figure6-6.

Figure6-6 Bundling Cables (1)

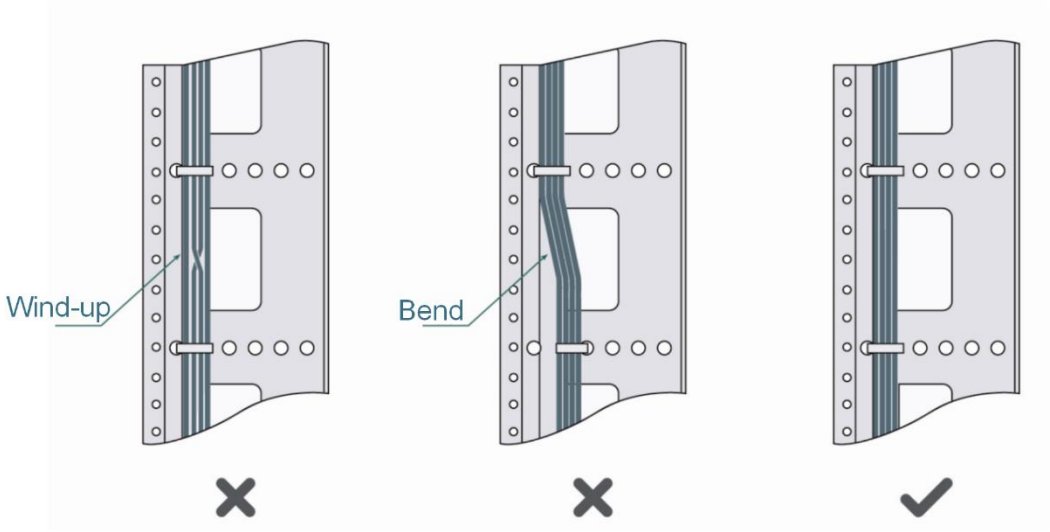

- Cables of different types (such as power cords, signal cables, and grounding wires) should be separated in cabling and bundling. Mixed bundling is not allowed. When they are close to each other, you are advised to adopt crossover cabling. In the case of parallel cabling, maintain a minimum distance of 30 mm (1.18 in.) between power cords and signal cables.
- The cable management brackets and cabling troughs inside and outside the rack should be smooth without sharp corners.
- The metal holes traversed by cables should have a smooth and fully rounded surface or an insulated lining.
- Use cable ties to bundle cables properly. Please do not connect two or more cable ties to bundle cables.
- After bundling up cables with cable ties, cut off the remaining part. The cut should be smooth and trim without sharp corners, as shown in Figure6-7.

Figure6-7 Bundling Cables (2)

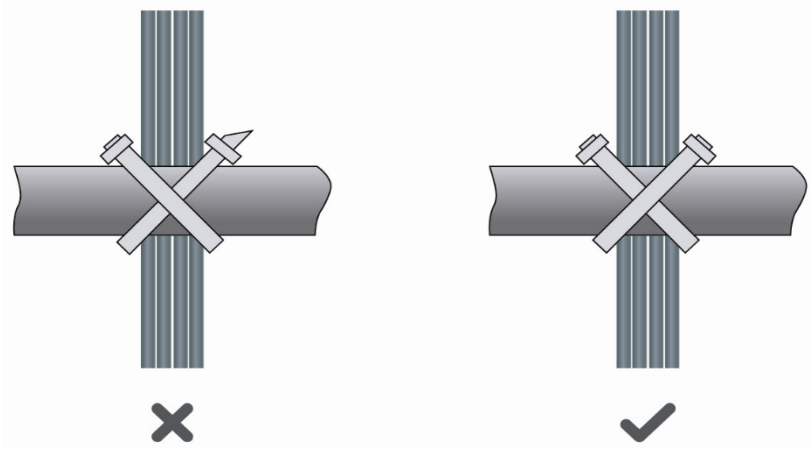

- When cables need to be bent, bundle them first but do not tie cables within the bend. Otherwise, stress may be generated on the cables and cause the wires inside to break, as shown in Figure6-8.

Figure6-8 Bundling Cables (3)

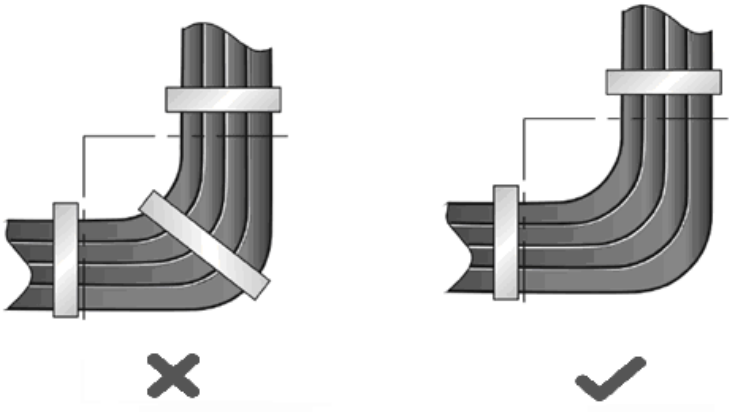

- Cables not to be assembled or the remaining parts of cables should be folded and placed in a proper position of the rack or cable management trough. The proper position refers to a position that does not affect the equipment running or damage the equipment or cables.
- Power cords must not be bundled on the guide rails of moving parts.
- The power cords connecting moving parts such as door grounding wires should be reserved with some excess after being assembled to avoid suffering tension or stress. When a moving part reaches the installation position, the remaining cable part should not touch heat sources, sharp corners, or sharp edges. If heat sources must be touched, high-temperature cables should be used.
- When using screw threads to secure a cable lug, ensure that the bolt or screw is properly tightened and take measures to prevent it from loosening, as shown in Figure6-9.

Figure6-9 Fastening Cables

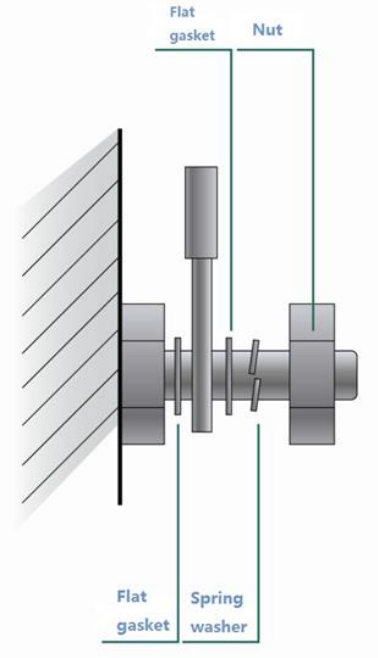

- Hard power cords should be secured near the cable termination area to prevent stress on the cable termination area and cables.
- Do not use tapping screws to secure cable lugs.
- Power cords of the same type and in the same cabling direction should be bundled up into cable bunches, with cables in cable bunches clean and straight.
- Bundle cables by using cable ties according to the following table.

Cable Bunch Diameter	Bundling Spacing
10 mm (0.39 in.)	80–150 mm (3.15–5.91 in.)
10–30 mm (0.39–1.18 in.)	150–200 mm (5.91–7.87 in.)
30 mm (1.18 in.)	200–300 mm (7.87–11.81 in.)

- Do not tie cables or bundles in a knot.
- For wiring terminal blocks (such as circuit breakers) with cord end terminals, the metal part of the cord end terminal should not be exposed outside the terminal block when assembled.

6.5 Site Selection

- The equipment room should be at least 5 km (3.11 miles) away from heavy pollution sources, such as smelters, coal mines, and thermal power plants. The equipment room should be at least 3.7 km (2.30 miles) away from medium pollution sources, such as the chemical factory, rubber factory, and electroplating factory. The equipment room should be at least 2 km (1.24 miles) away from light pollution sources, such as the food factory and leather plant. If the pollution source is unavoidable, the equipment room should be located on

the windward side of the pollution source perennially with advanced protection.

- The equipment room should be at least 3.7 km (2.30 miles) away from the sea or salt lake. Otherwise, the equipment room must be sealed, with an air conditioner installed for temperature control. Saline soil cannot be used for construction. Otherwise, you should select equipment with advanced protection against severe environments.
- Do not build the equipment room in the proximity of livestock farms. Otherwise, the equipment room should be located on the windward side of the pollution source perennially. The previous livestock house or fertilizer warehouse cannot be used as the equipment room.
- The equipment room should be firm enough to withstand severe weather conditions such as windstorms, heavy rain, and dense dust. If the dust is unavoidable, keep the door and window away from the pollution source.
- The equipment falls into Class A. Therefore, the equipment room should be located away from the residential area. Otherwise, the equipment room should meet construction specifications to avoid noise and radio interference.
- Make sure the air vent of the equipment room is away from the sewage pipe, septic tank, and sewage treatment tank. Keep the equipment room under positive pressure to prevent corrosive gas from entering the equipment room to corrode components and circuit boards.
- Keep the equipment room away from industrial boilers and heating boilers.
- The equipment room should be on the second floor or higher. Otherwise, the equipment room floor should be 600 mm (23.62 in.) higher than the highest flood level ever recorded.
- Make sure no cracks or holes exist in the wall and floor. If there are cable entries in the wall or window, take proper sealing measures. Ensure that the wall is flat, wear-resistant, and dust-free, meeting standards for flame resistance, soundproofing, heat absorption, dust reduction, and electromagnetic shielding.
- Keep the door and the window closed to make the equipment room sealed.
- You are advised to use the steel door for soundproofing.
- Do not use sulfur-containing materials.
- Keep the air conditioner from blowing wind straight toward the equipment or blowing water drops from the window or air vent toward the equipment.